DSR-051-05-044K & 045K
LANDRY & WALNUT PUMP STATIONS

EMERGENCY REPAIR
BUILT UNDER THE
EMERGENCY WATERSHED PROTECTION PROGRAM
BY GRAND ISLE NDEPENDANT
LEVEE DISTRICT
WITH THE ASSISTANCE OF THE
NATURAL RESOURCES CONSERVATION SERVICE
OF THE
UNITED STATES DEPARTMENT OF AGRICULTURE
2008

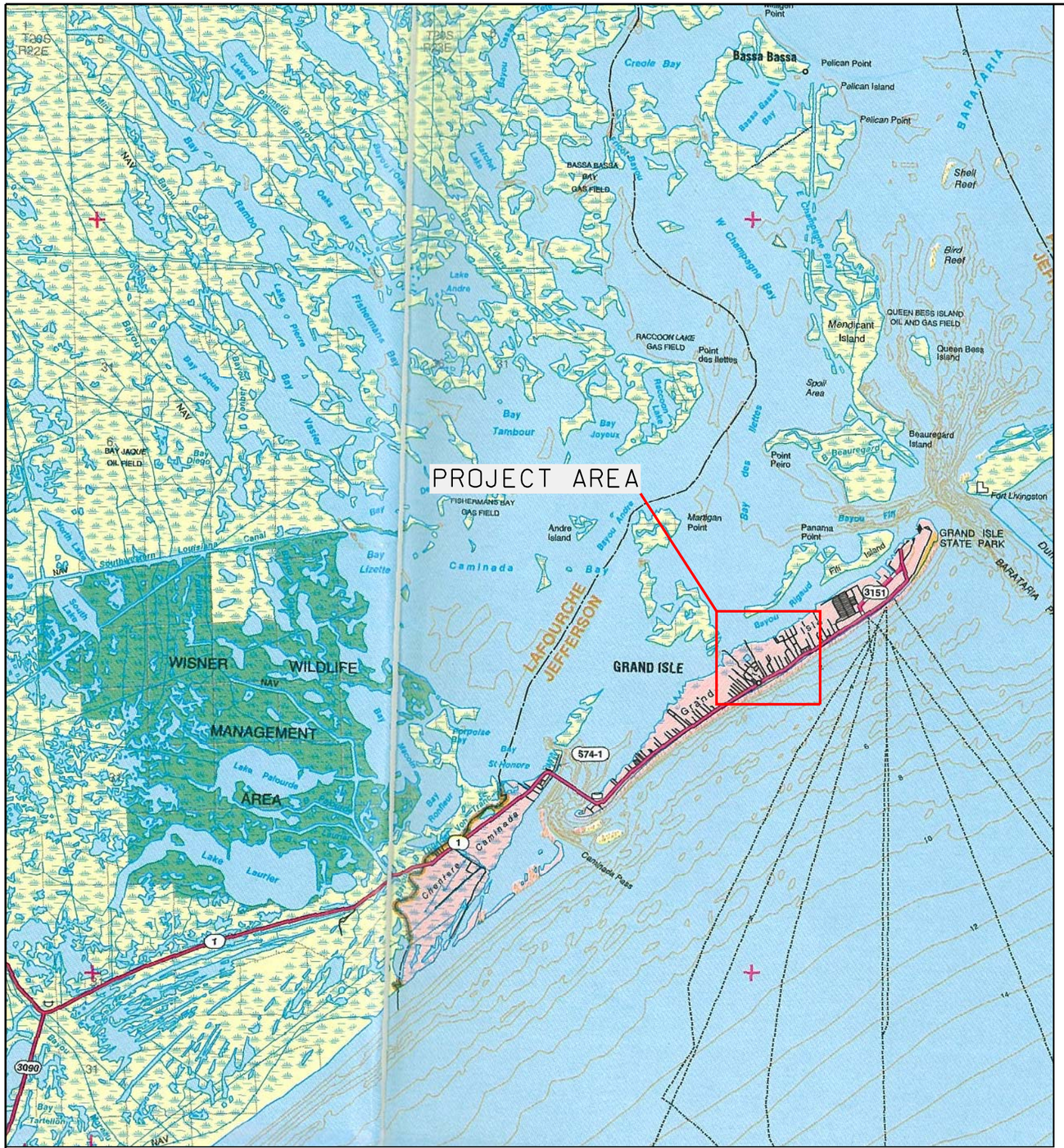

VICINITY MAP
DSR-051-05-044K

5000 0 5000 10000 15000 20000
SCALE IN FEET

MAPS COPYRIGHT "THE ROADS OF LOUISIANA", SHEARER PUBLISHING

LOCATION IN LOUISIANA
(JEFFERSON PARISH)

INDEX TO DRAWINGS

1. COVER SHEET & VICINTY MAP
2. PROJECT PLAN MAP
3. DETAILS - PIPE SUPPORT
4. SITE PLAN - SITE #1(WALNUT PUMP STATION)
5. SITE #1 - FILL OVER PIPE - SECTIONS - STA. 0+00 & 0+10
6. SITE #1 - FILL OVER PIPE - SECTIONS - STA. 0+20 & 0+30
7. SITE #1 - FILL OVER PIPE - SECTIONS - STA. 0+40 & 0+50
8. SITE #1 - FILL OVER PIPE - SECTION - STA. 0+56
9. SITE #1 - EARTHEN DIKE - SECTIONS - STA. 0+00 & 0+10
10. SITE #1 - EARTHEN DIKE - SECTIONS - STA. 0+20 & 0+30
11. SITE #1 - EARTHEN DIKE - SECTIONS - STA. 0+40 & 0+52
12. SITE PLAN-SITE #2(LANDRY PUMP STATION)
13. SITE #2 - EARTHEN DIKE - SECTIONS - STA. 0+00 & 0+10
14. SITE #2 - EARTHEN DIKE - SECTIONS - STA. 0+20 & 0+30
15. SITE #2 - EARTHEN DIKE - SECTIONS - STA. 0+40 & 0+50
16. SITE #2 - EARTHEN DIKE - SECTIONS - STA. 0+60 & 0+70
17. SITE #2 - EARTHEN DIKE - SECTIONS - STA. 0+80 & 0+90
18. SITE #2 - EARTHEN DIKE - SECTIONS - STA. 1+00 & 1+10
19. SITE #2 - EARTHEN DIKE - SECTION - STA. 1+18

REVISIONS			
NO.	DATE	APPROVED	TITLE

		Date
Designed	CHERIE LAFLEUR	08/07
Drawn	ABBEY GREMILLION	08/07
Checked	CHERIE LAFLEUR	08/07
Approved	ED GIERING III	08/07

COVER SHEET & VICINTY MAP
EWP - HURRICANE KATRINA
DSR-051-05-044K-LANDRY & WALNUT PUMPS
JEFFERSON PARISH, LOUISIANA

NRCS
Natural Resources Conservation Service
United States Department of Agriculture

File Name
LA051-05-044K-01

Drawing Name
LA051-05-044K-01

Sheet 01 of 19

...\LA051-05-044K-01.dgn 11/29/2007 10:29:07 AM

ESTIMATED QUANTITIES		
SITE NO.	1	2
EARTHFILL - FILL OVER PIPE (CY)	225	0
EARTHFILL - EARTHEN DIKE (CY)	54	187
ECRM (SY)	221	210

REVISIONS			
NO.	DATE	APPROVED	TITLE

		DATE
DESIGNED	CHERIE LAFLEUR	08/07
DRAWN	ABBEY GREMILLION	08/07
CHECKED	CHERIE LAFLEUR	08/07
APPROVED	ED GIERING III	08/07

PROJECT PLAN MAP
EWP - HURRICANE KATRINA
DSR-051-05-044K-WALNUT & LANDRY PUMP
JEFFERSON PARISH, LOUISIANA

NRCS
Natural Resources Conservation Service
United States Department of Agriculture

FILE NAME
LA051-05-044K-02

DRAWING NAME
LA051-05-044K-02

SHEET 02 of 19

...\LA051-05-044K-02.dgn 12/4/2007 11:18:09 AM

DRAIN PIPE SUPPORT LOCATIONS

CHANNEL NAME	DSR #	SITE #	STA.	DIA.	MATERIAL	REMOVE	ADD
LANDRY PUMP STA.	DSR-051-05-044K	2	0+70	18"	PVC	1'	24'

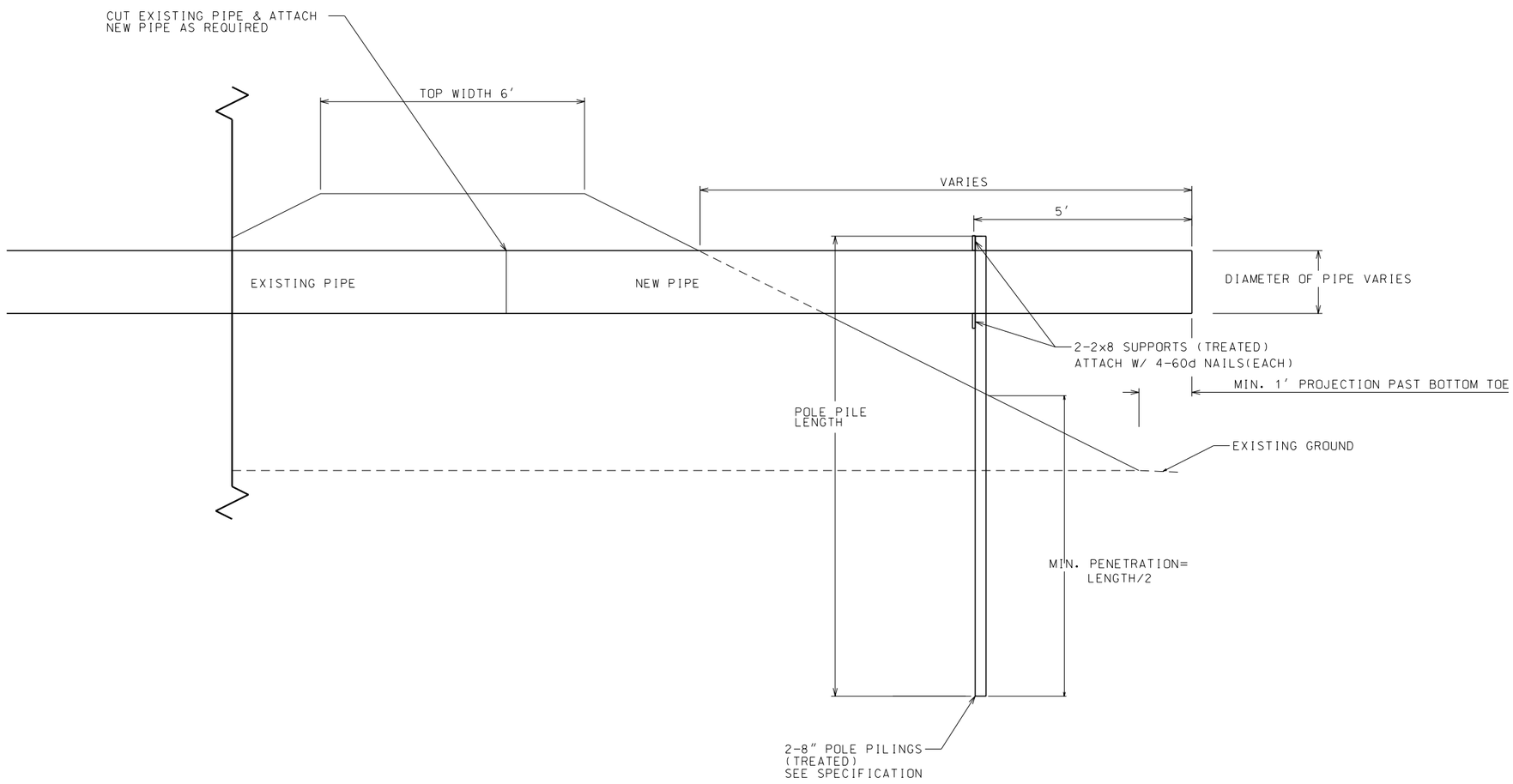

NOTICE:
96 HOURS BEFORE DIGGING
CALL 1-800-272-3020
TO LOCATE UTILITY LINES

TYPICAL PIPE SUPPORT

NOT TO SCALE

REVISIONS			
NO.	DATE	APPROVED	TITLE

		Date
Designed	CHERIE LAFLEUR	08/07
Drawn	ABBEY GREMILLION	08/07
Checked	CHERIE LAFLEUR	08/07
Approved	ED GIERING III	08/07

PIPE SUPPORT DETAILS
EWP - HURRICANE KATRINA
DSR-051-05-044K-WALNUT/LANDRY PUMP
JEFFERSON PARISH, LOUISIANA

NRCS
Natural Resources Conservation Service
United States Department of Agriculture

File Name
LA051-05-044K-03

Drawing Name
LA051-05-044K-03

Sheet 03 of 19

...\LA051-05-044K-03.dgn 11/29/2007 3:55:35 PM

NOTICE:
96 HOURS BEFORE DIGGING
CALL 1-800-272-3020
TO LOCATE UTILITY LINES

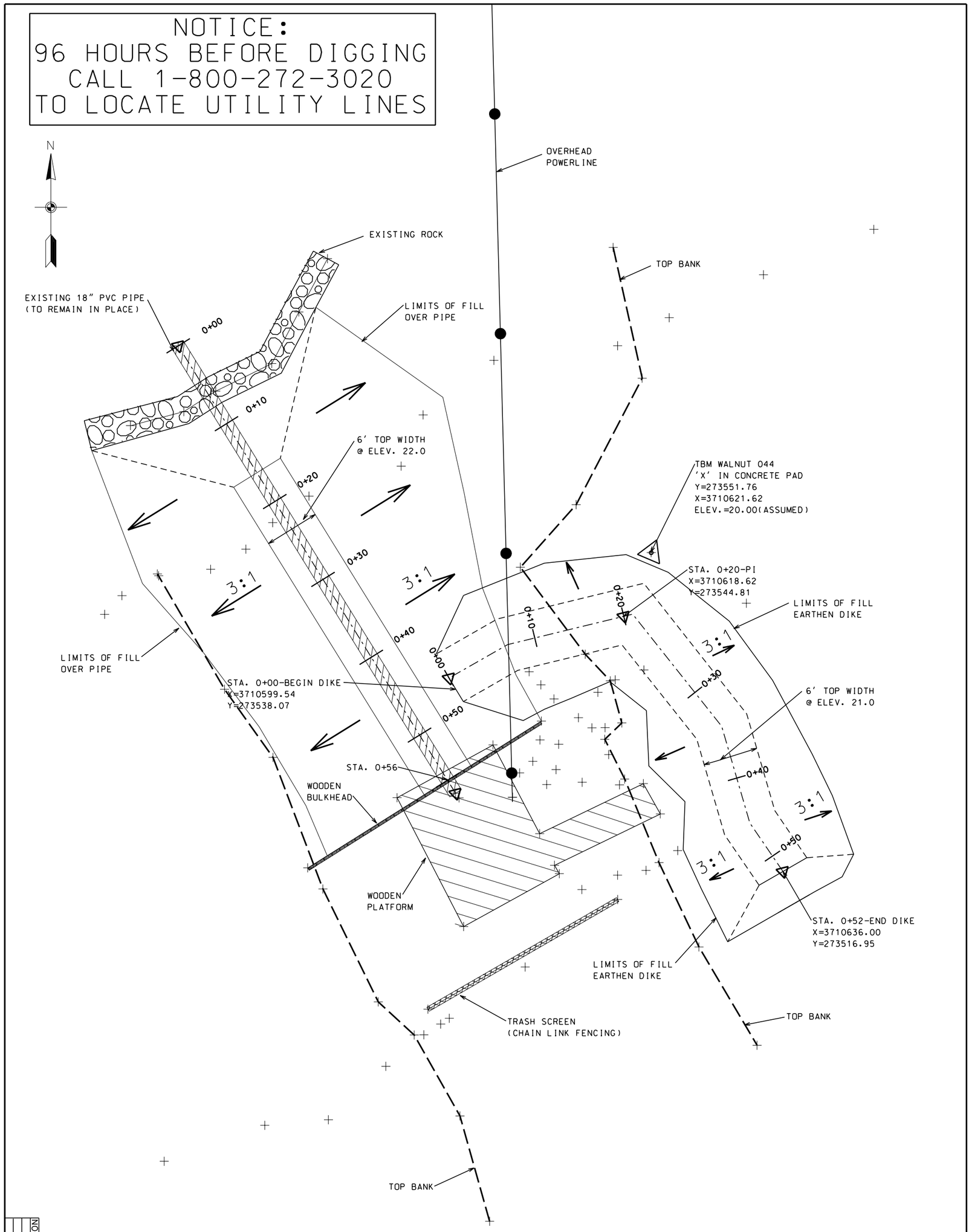

SITE PLAN - SITE 1-WALNUT PUMP STATION
DSR-051-05-044K - JEFFERSON PARISH

5 0 5 10 15 20
SCALE IN FEET

NO.	DATE	APPROVED	TITLE

REVISIONS

Sheet 04 of 19

Drawing Name: LA051-05-044K-04

File Name: LA051-05-044K-04

NRCS
Natural Resources Conservation Service
United States Department of Agriculture

SITE PLAN - SITE 1-WALNUT PUMP STATION
EWP - HURRICANE KATRINA
DSR-051-05-044K-WALNUT PUMP STATION
JEFFERSON PARISH, LOUISIANA

		Date
Designed	CHERIE LAFLEUR	08/07
Drawn	ABBEY GREMILLION	08/07
Checked	CHERIE LAFLEUR	08/07
Approved	ED GIERING III	08/07

...\LA051-05-044K-04.dgn 11/29/2007 10:32:47 AM

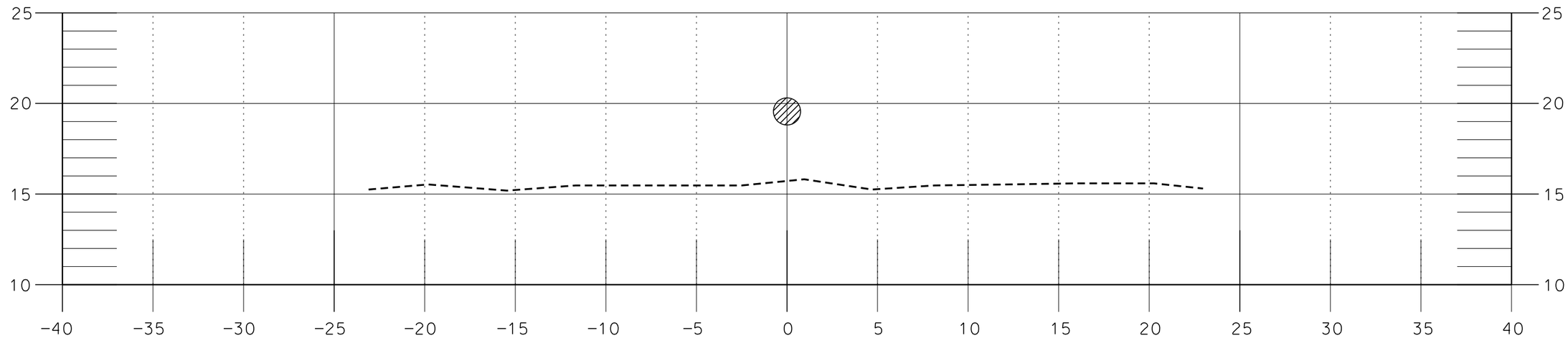

SITE #1-FILL OVER PIPE - STA. 0+00
DSR-051-05-044K - JEFFERSON PARISH

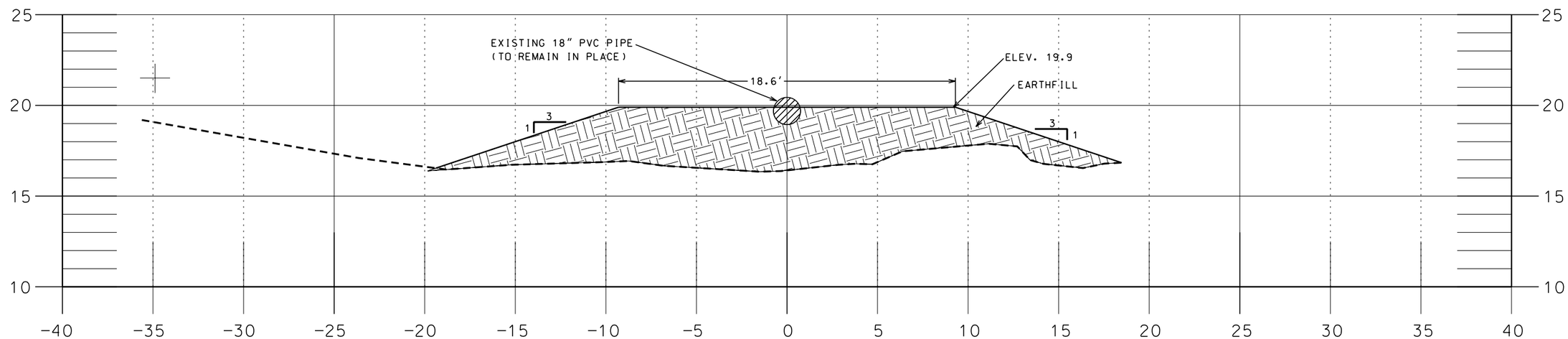

SITE #1-FILL OVER PIPE - STA. 0+10
DSR-051-05-044K - JEFFERSON PARISH

REVISIONS			
NO.	DATE	APPROVED	TITLE

		Date
Designed	CHERIE LAFLEUR	08/07
Drawn	ABBEY GREMILLION	08/07
Checked	CHERIE LAFLEUR	08/07
Approved	ED GIERING III	08/07

SITE#1-SECTIONS - STA. 0+00 & STA. 0+10
EWP - HURRICANE KATRINA
DSR-051-05-044K-WALNUT PUMP
JEFFERSON PARISH, LOUISIANA

NRCS
Natural Resources Conservation Service
United States Department of Agriculture

File Name
LA051-05-044K-05

Drawing Name
LA051-05-044K-05

Sheet 05 of 19

...\LA051-05-044K-05.dgn 11/29/2007 10:35:33 AM

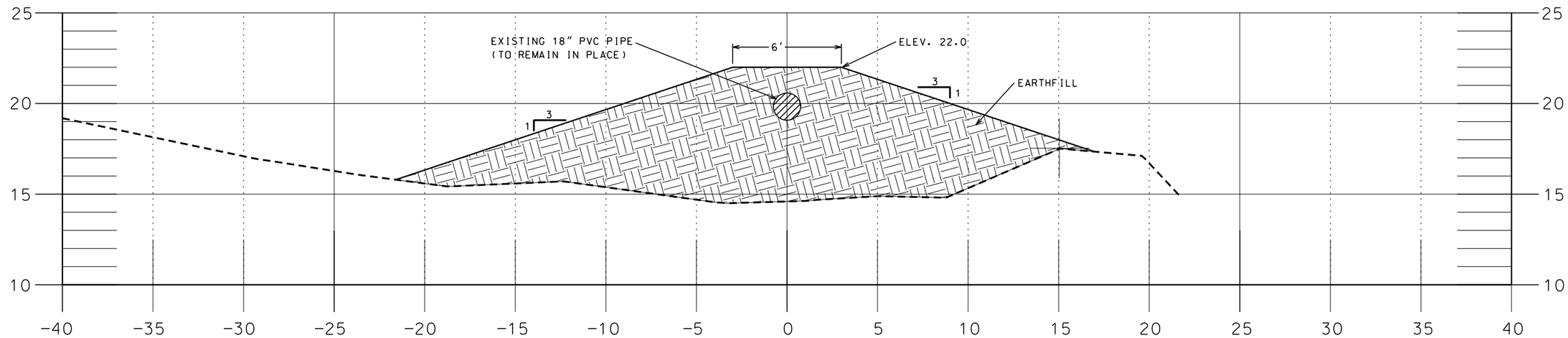

SITE #1-FILL OVER PIPE - STA. 0+20
DSR-051-05-044K - JEFFERSON PARISH

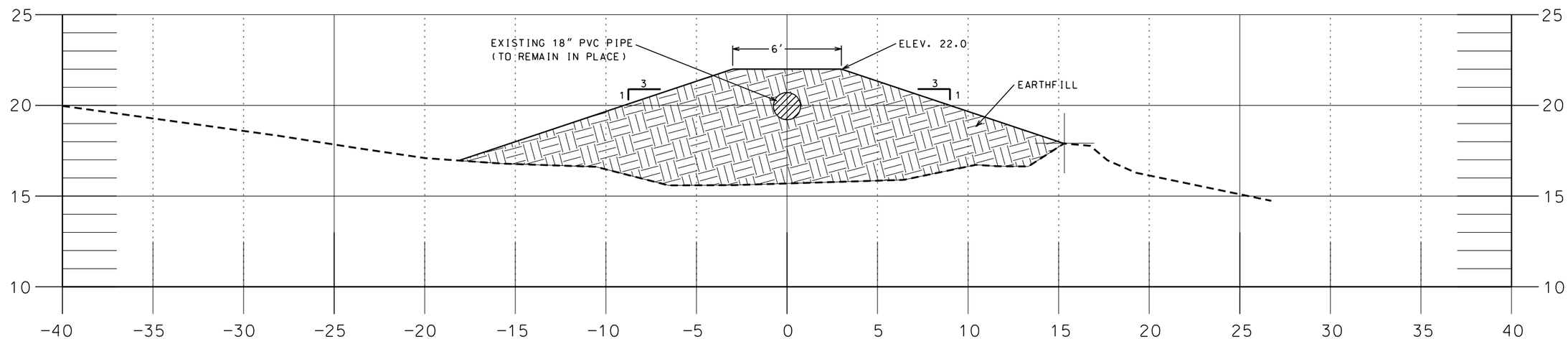

SITE #1-FILL OVER PIPE - STA. 0+30
DSR-051-05-044K - JEFFERSON PARISH

REVISIONS			
NO.	DATE	APPROVED	TITLE

		Date
Designed	CHERIE LAFLEUR	08/07
Drawn	ABBEY GREMILLION	08/07
Checked	CHERIE LAFLEUR	08/07
Approved	ED GIERING III	08/07

SITE#1-SECTIONS - STA. 0+20 & STA. 0+30
EWP - HURRICANE KATRINA
DSR-051-05-044K-WALNUT PUMP
JEFFERSON PARISH, LOUISIANA

NRCS
Natural Resources Conservation Service
United States Department of Agriculture

File Name
LA051-05-044K-06

Drawing Name
LA051-05-044K-06

Sheet 06 of 19

...\LA051-05-044K-06.dgn 11/29/2007 10:36:11 AM

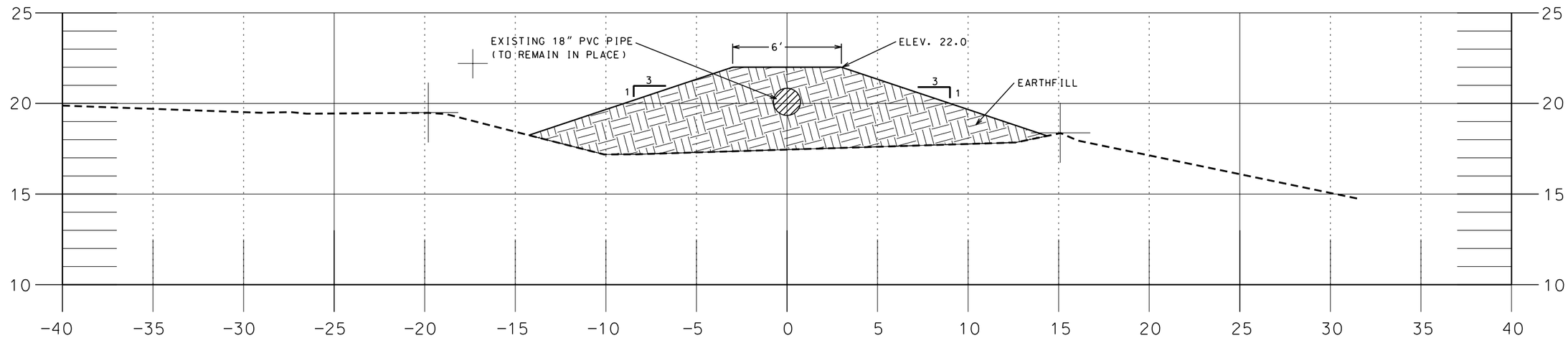

SITE #1-FILL OVER PIPE - STA. 0+40
DSR-051-05-044K - JEFFERSON PARISH

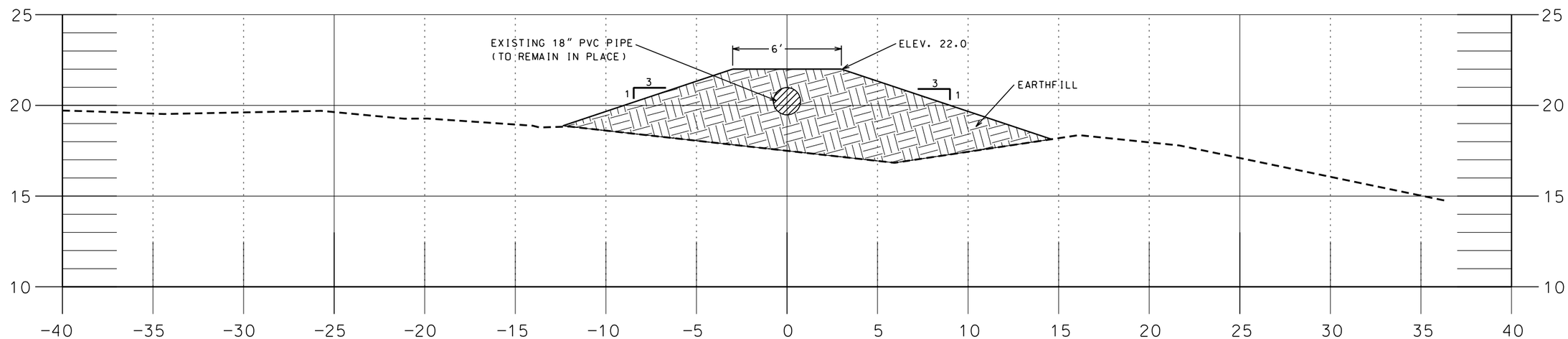

SITE #1-FILL OVER PIPE - STA. 0+50
DSR-051-05-044K - JEFFERSON PARISH

REVISIONS			
NO.	DATE	APPROVED	TITLE

		Date
Designed	CHERIE LAFLEUR	08/07
Drawn	ABBEY GREMILLION	08/07
Checked	CHERIE LAFLEUR	08/07
Approved	ED GIERING III	08/07

SITE#1-SECTIONS - STA. 0+40 & STA. 0+50
EWP - HURRICANE KATRINA
DSR-051-05-044K-WALNUT PUMP
JEFFERSON PARISH, LOUISIANA

NRCS
Natural Resources Conservation Service
United States Department of Agriculture

File Name
LA051-05-044K-07

Drawing Name
LA051-05-044K-07

Sheet 07 of 19

...\LA051-05-044K-07.dgn 11/29/2007 10:37:04 AM

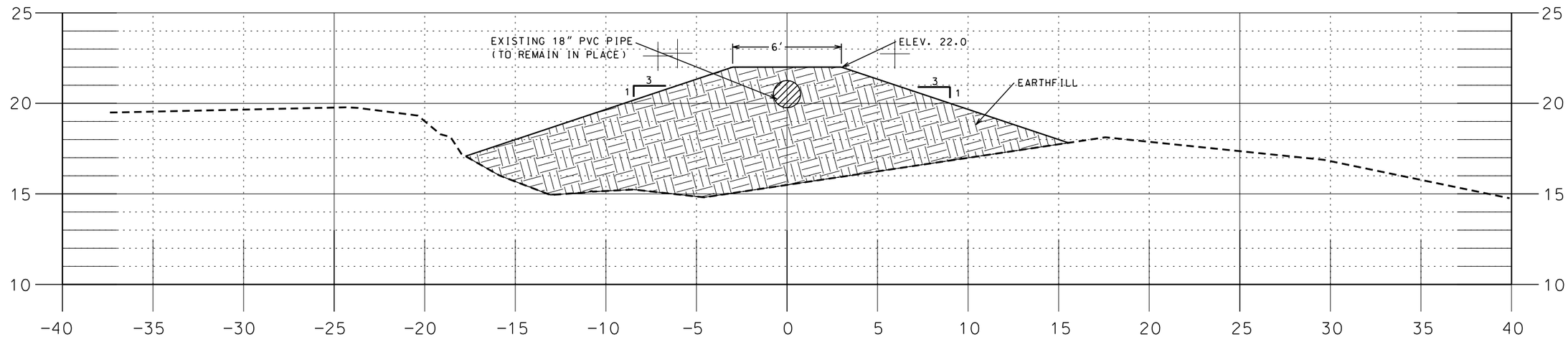

SITE #1-FILL OVER PIPE - STA. 0+56
DSR-051-05-044K - JEFFERSON PARISH

Designed	CHERIE LAFLEUR		Date 08/07
Drawn	ABBEY GREMILLION		08/07
Checked	CHERIE LAFLEUR		08/07
Approved	ED GIERING III		08/07

SITE#1-SECTION - STA. 0+56
EWP - HURRICANE KATRINA
DSR-051-05-044K-WALNUT PUMP
JEFFERSON PARISH, LOUISIANA

NRCS
Natural Resources Conservation Service
United States Department of Agriculture

File Name
LA051-05-044K-08

Drawing Name
LA051-05-044K-08

REVISIONS

NO.	DATE	APPROVED	TITLE

Sheet 08 of 19

...\LA051-05-044K-08.dgn 11/29/2007 10:37:58 AM

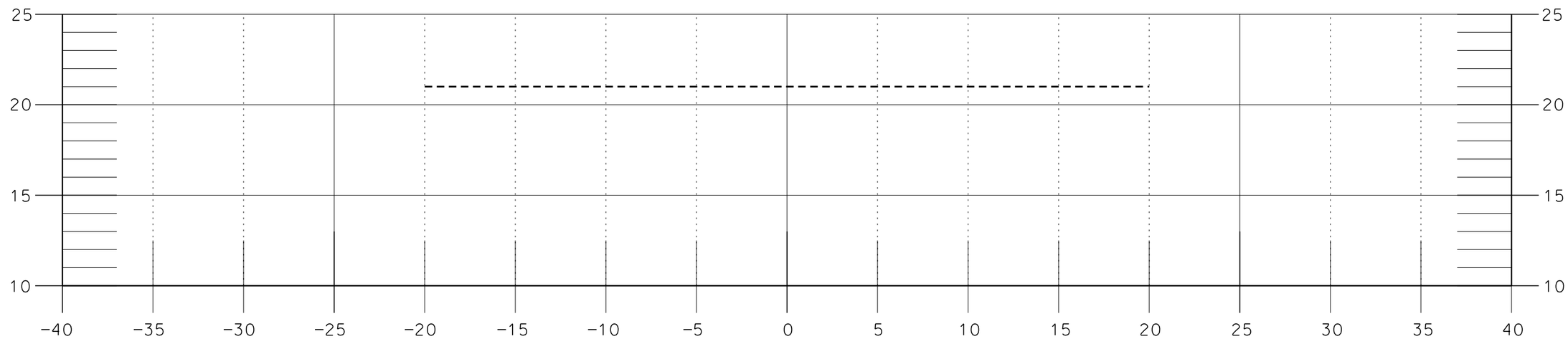

SITE 1-EARTHEN DIKE - STA. 0+00
DSR-051-05-044K - JEFFERSON PARISH

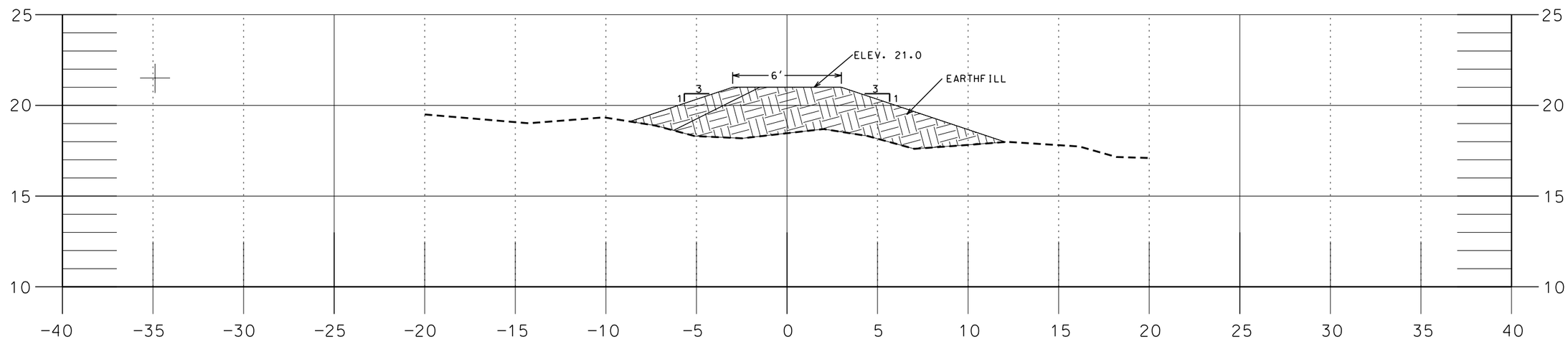

SITE 1-EARTHEN DIKE - STA. 0+10
DSR-051-05-044K - JEFFERSON PARISH

REVISIONS			
NO.	DATE	APPROVED	TITLE

		Date
Designed	CHERIE LAFLEUR	08/07
Drawn	ABBEY GREMILLION	08/07
Checked	CHERIE LAFLEUR	08/07
Approved	ED GIERING III	08/07

EARTHEN DIKE - STA. 0+00 & STA. 0+10
EWP - HURRICANE KATRINA
DSR-051-05-044K-WALNUT PUMP
JEFFERSON PARISH, LOUISIANA

NRCS
Natural Resources Conservation Service
United States Department of Agriculture

File Name
LA051-05-044K-09

Drawing Name
LA051-05-044K-09

Sheet 09 of 19

...\LA051-05-044K-09.dgn 11/29/2007 10:38:53 AM

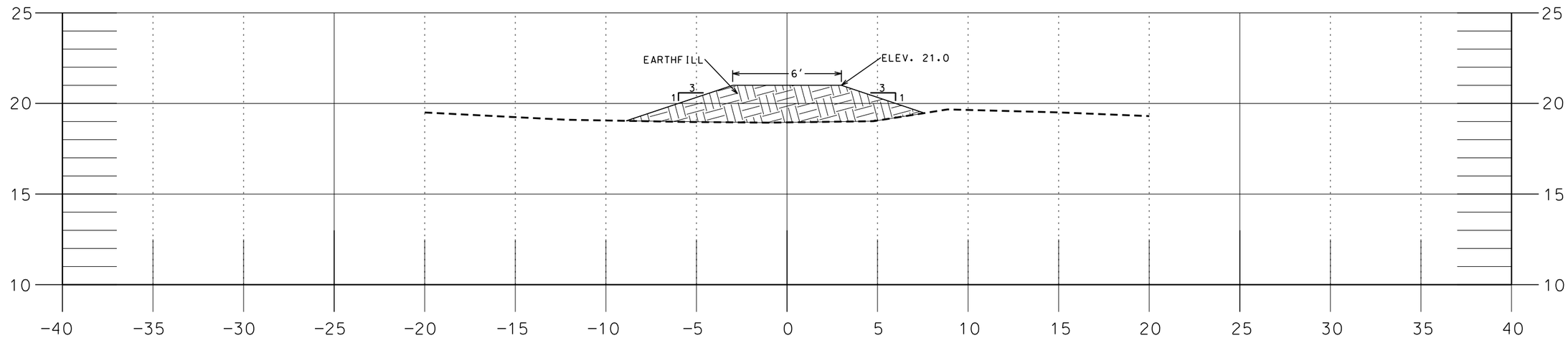

SITE 1-EARHEN DIKE - STA. 0+20
DSR-051-05-044K - JEFFERSON PARISH

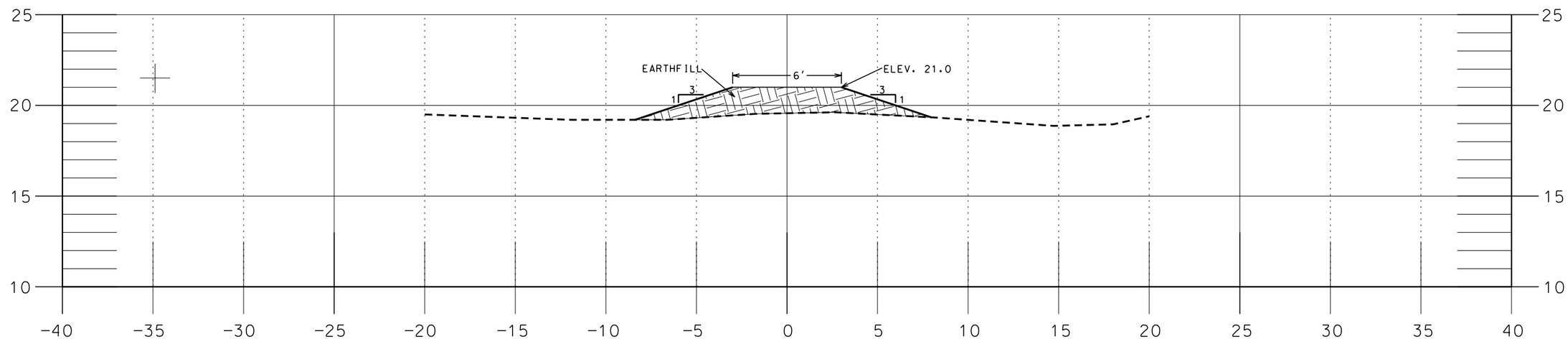

SITE 1-EARTHEN DIKE - STA. 0+30
DSR-051-05-044K - JEFFERSON PARISH

REVISIONS			
NO.	DATE	APPROVED	TITLE

		Date
Designed	CHERIE LAFLEUR	08/07
Drawn	ABBEY GREMILLION	08/07
Checked	CHERIE LAFLEUR	08/07
Approved	ED GIERING III	08/07

EARTHEN DIKE - STA. 0+20 & STA. 0+30
EWP - HURRICANE KATRINA
DSR-051-05-044K-WALNUT PUMP
JEFFERSON PARISH, LOUISIANA

NRCS
Natural Resources Conservation Service
United States Department of Agriculture

File Name
LA051-05-044K-10

Drawing Name
LA051-05-044K-10

Sheet 10 of 19

...\LA051-05-044K-10.dgn 11/29/2007 10:39:27 AM

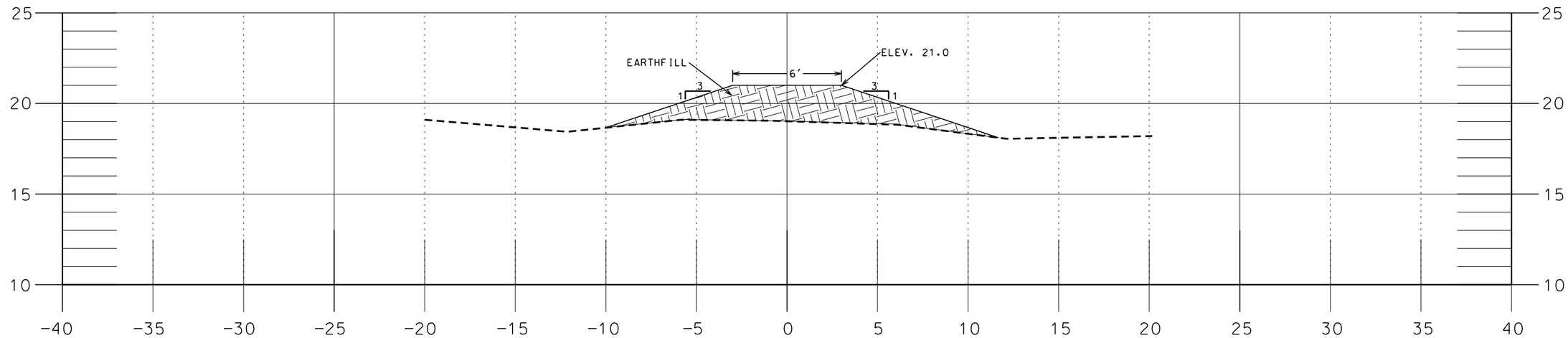

SITE 1-EARTHEN DIKE - STA. 0+40
DSR-051-05-044K - JEFFERSON PARISH

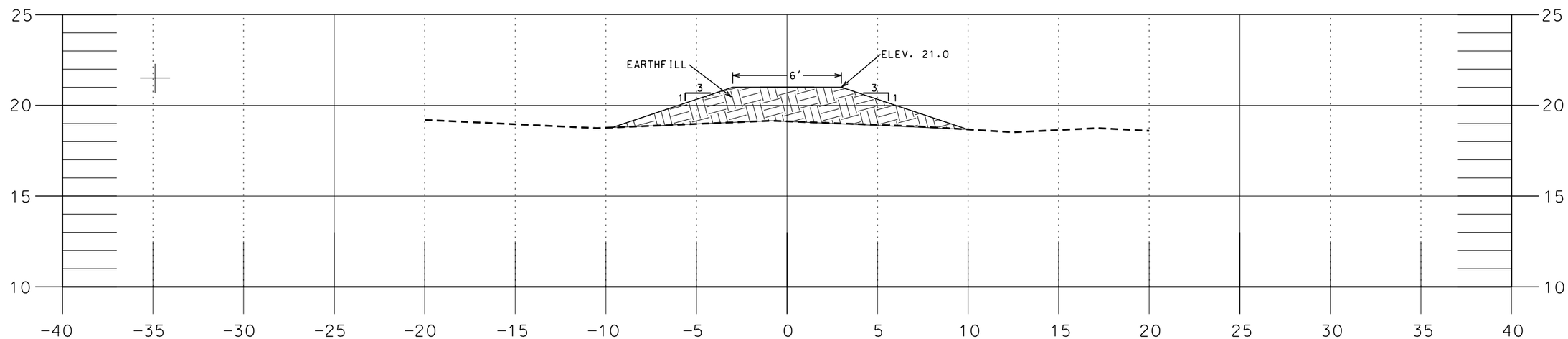

SITE 1-EARTHEN DIKE - STA. 0+52
DSR-051-05-044K - JEFFERSON PARISH

REVISIONS			
NO.	DATE	APPROVED	TITLE

		Date
Designed	CHERIE LAFLEUR	08/07
Drawn	ABBEY GREMILLION	08/07
Checked	CHERIE LAFLEUR	08/07
Approved	ED GIERING III	08/07

EARTHEN DIKE - STA. 0+40 & STA. 0+52
EWP - HURRICANE KATRINA
DSR-051-05-044K-WALNUT PUMP
JEFFERSON PARISH, LOUISIANA

NRCS
Natural Resources Conservation Service
United States Department of Agriculture

File Name
LA051-05-044K-11

Drawing Name
LA051-05-044K-11

Sheet 11 of 19

...\LA051-05-044K-11.dgn 11/29/2007 10:40:26 AM

NOTICE:
96 HOURS BEFORE DIGGING
CALL 1-800-272-3020
TO LOCATE UTILITY LINES

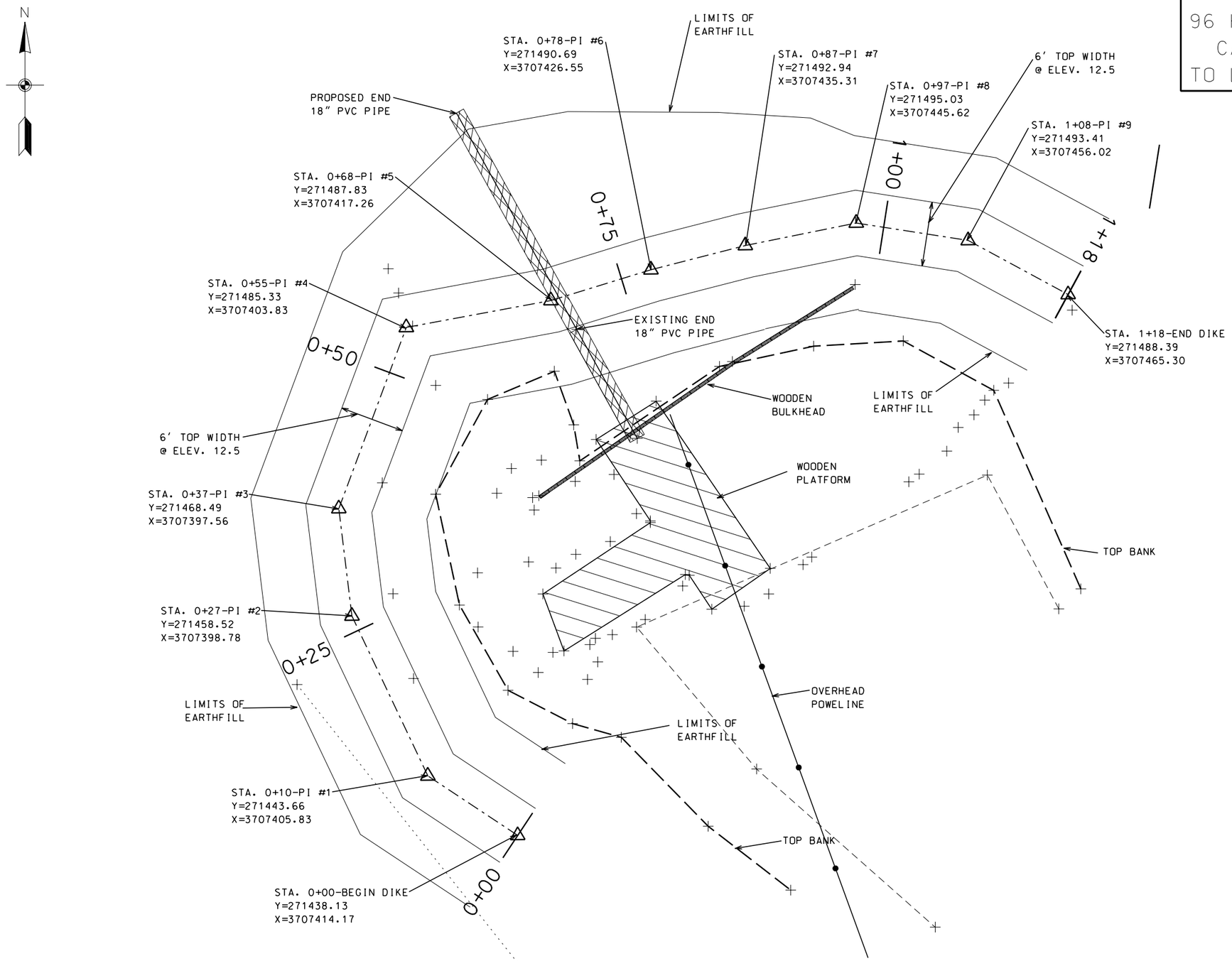

SITE PLAN - SITE #2-LANDRY PUMP STATION
DSR-051-05-045K - JEFFERSON PARISH

5 0 5 10 15 20
SCALE IN FEET

NOTE: FOR TBM LOCATION SEE SHEET 2 OF 19

REVISIONS			
NO.	DATE	APPROVED	TITLE

		Date
Designed	CHERIE LAFLEUR	08/07
Drawn	ABBEY GREMILLION	08/07
Checked	CHERIE LAFLEUR	08/07
Approved	ED GIERING III	08/07

SITE PLAN - SITE#2-LANDRY PUMP STATION
EWP - HURRICANE KATRINA
DSR-051-05-045K-LANDRY PUMP
JEFFERSON PARISH, LOUISIANA

NRCS
Natural Resources Conservation Service
United States Department of Agriculture

File Name
LA051-05-044K-12

Drawing Name
LA051-05-044K-12

Sheet 12 of 19

...\LA051-05-044K-12.dgn 11/29/2007 10:41:26 AM

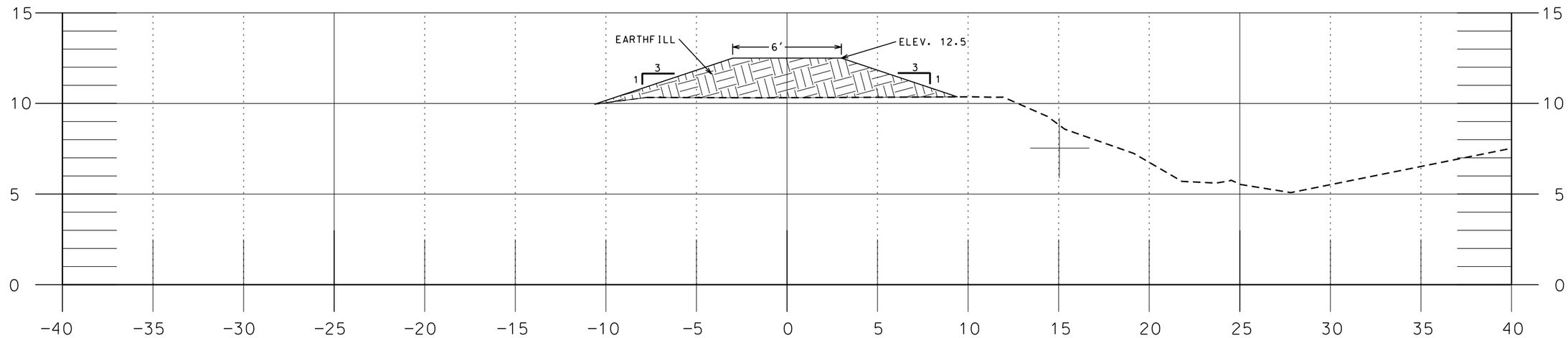

SITE #2-EARTHEN DIKE - STA. 0+00
DSR-051-05-045K - JEFFERSON PARISH

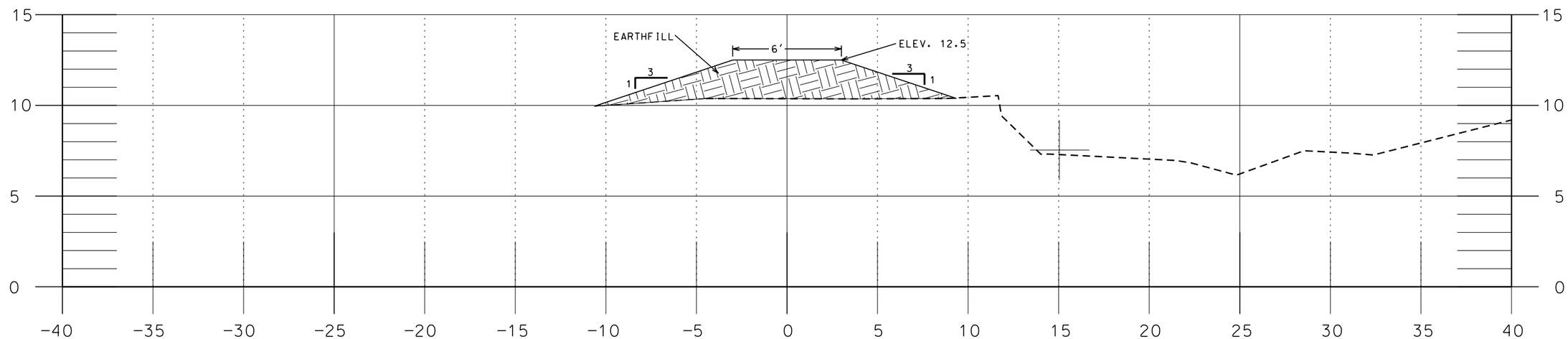

SITE #2-EARTHEN DIKE - STA. 0+10
DSR-051-05-045K - JEFFERSON PARISH

REVISIONS			
NO.	DATE	APPROVED	TITLE

		Date
Designed	CHERIE LAFLEUR	08/07
Drawn	ABBEY GREMILLION	08/07
Checked	CHERIE LAFLEUR	08/07
Approved	ED GIERING III	08/07

SITE#2-SECTIONS - STA. 0+00 & STA. 0+10
EWP - HURRICANE KATRINA
DSR-051-05-045K-LANDRY PUMP
JEFFERSON PARISH, LOUISIANA

NRCS
Natural Resources Conservation Service
United States Department of Agriculture

File Name
LA051-05-044K-13

Drawing Name
LA051-05-044K-13

Sheet 13 of 19

...\LA051-05-044K-13.dgn 11/29/2007 10:43:21 AM

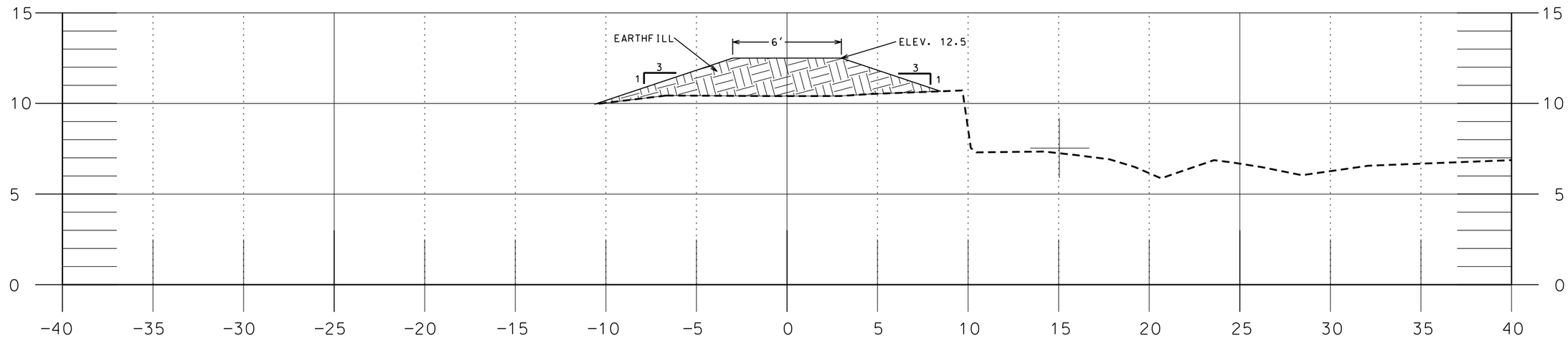

SITE #2-EARTHEN DIKE - STA. 0+20
DSR-051-05-045K - JEFFERSON PARISH

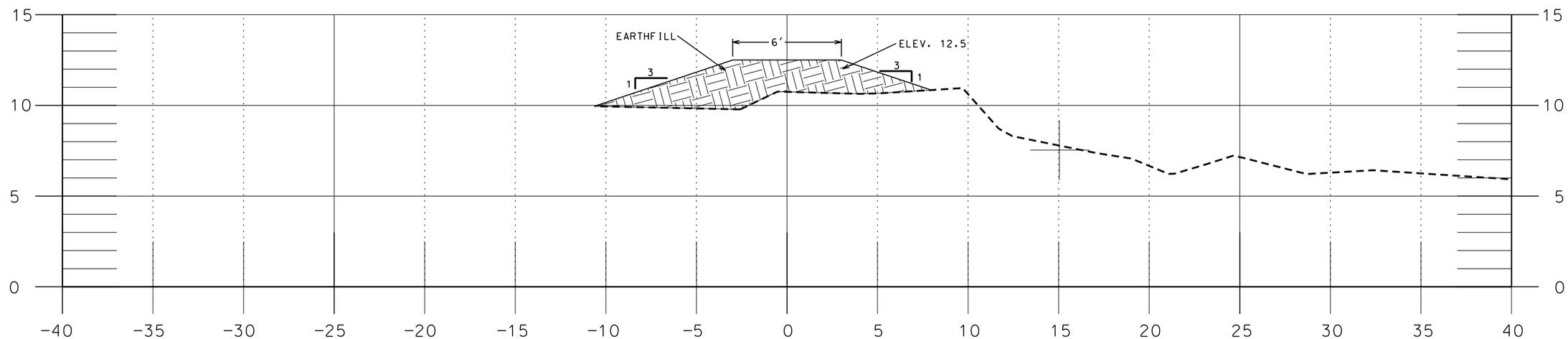

SITE #2-EARTHEN DIKE - STA. 0+30
DSR-051-05-045K - JEFFERSON PARISH

REVISIONS			
NO.	DATE	APPROVED	TITLE

		Date
Designed	CHERIE LAFLEUR	08/07
Drawn	ABBEY GREMILLION	08/07
Checked	CHERIE LAFLEUR	08/07
Approved	ED GIERING III	08/07

SITE#2-SECTIONS - STA. 0+20 & STA. 0+30
EWP - HURRICANE KATRINA
DSR-051-05-045K-LANDRY PUMP
JEFFERSON PARISH, LOUISIANA

NRCS
Natural Resources Conservation Service
United States Department of Agriculture

File Name
LA051-05-044K-14

Drawing Name
LA051-05-044K-14

Sheet 14 of 19

...\LA051-05-044K-14.dgn 11/29/2007 10:45:16 AM

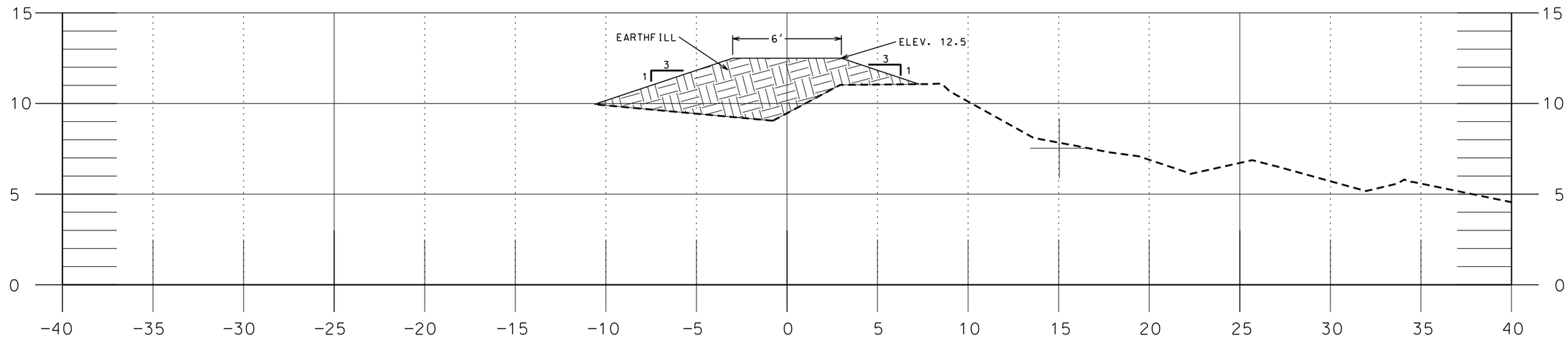

SITE #2-EARTHEN DIKE - STA. 0+40
DSR-051-05-045K - JEFFERSON PARISH

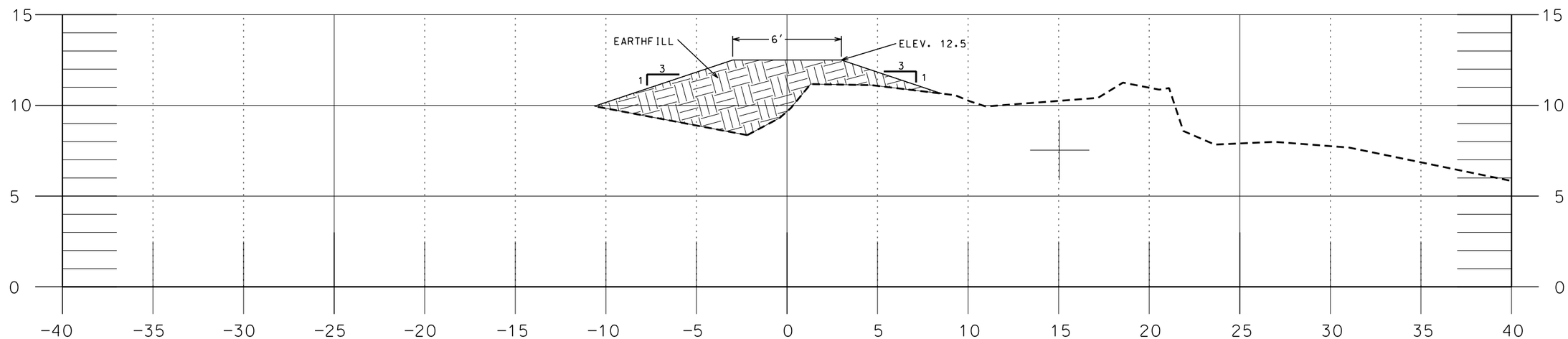

SITE #2-EARTHEN DIKE - STA. 0+50
DSR-051-05-045K - JEFFERSON PARISH

REVISIONS			
NO.	DATE	APPROVED	TITLE

		Date
Designed	CHERIE LAFLEUR	08/07
Drawn	ABBEY GREMILLION	08/07
Checked	CHERIE LAFLEUR	08/07
Approved	ED GIERING III	08/07

SITE#2-SECTIONS - STA. 0+40 & STA. 0+50
EWP - HURRICANE KATRINA
DSR-051-05-045K-LANDRY PUMP
JEFFERSON PARISH, LOUISIANA

NRCS
Natural Resources Conservation Service
United States Department of Agriculture

File Name
LA051-05-044K-15

Drawing Name
LA051-05-044K-15

Sheet 15 of 19

...\LA051-05-044K-15.dgn 11/29/2007 10:45:52 AM

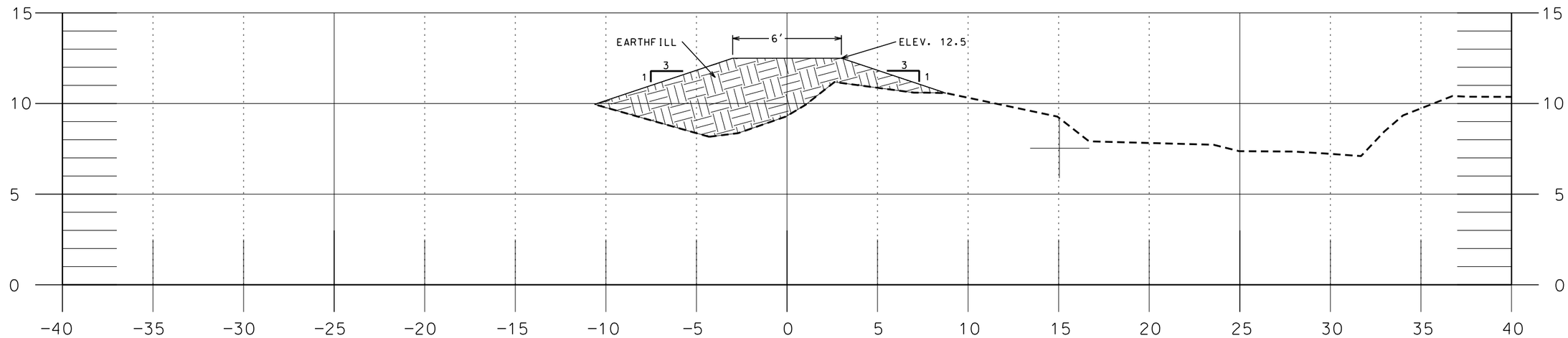

SITE #2-EARTHEN DIKE - STA. 0+60
DSR-051-05-045K - JEFFERSON PARISH

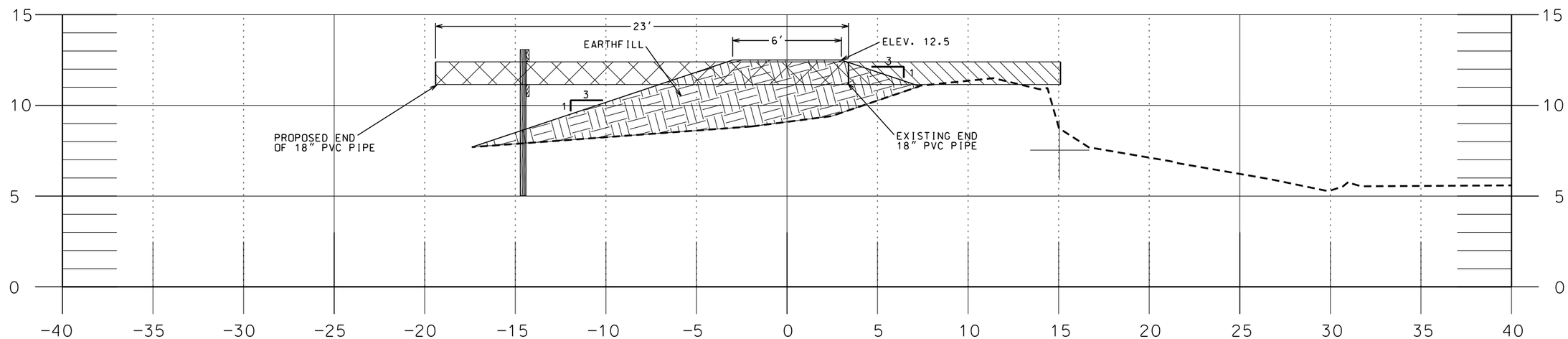

SITE #2-EARTHEN DIKE - STA. 0+70
DSR-051-05-045K - JEFFERSON PARISH

REVISIONS			
NO.	DATE	APPROVED	TITLE

		Date
Designed	CHERIE LAFLEUR	08/07
Drawn	ABBEY GREMILLION	08/07
Checked	CHERIE LAFLEUR	08/07
Approved	ED GIERING III	08/07

SITE#2-SECTIONS - STA. 0+60 & STA. 0+70
EWP - HURRICANE KATRINA
DSR-051-05-045K-LANDRY PUMP
JEFFERSON PARISH, LOUISIANA

NRCS
Natural Resources Conservation Service
United States Department of Agriculture

File Name
LA051-05-044K-16

Drawing Name
LA051-05-044K-16

Sheet 16 of 19

...\LA051-05-044K-16.dgn 11/29/2007 10:46:35 AM

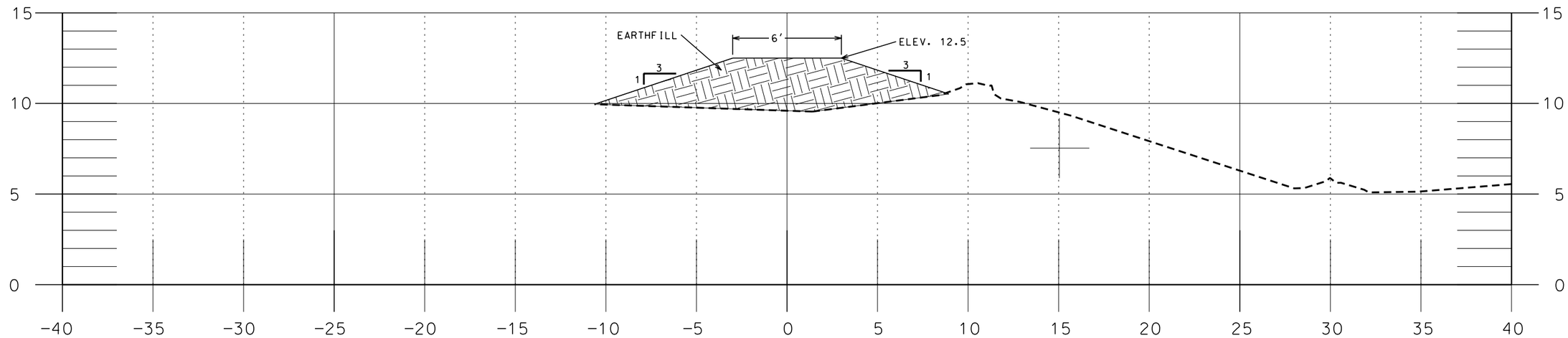

SITE #2-EARTHEN DIKE - STA. 0+80
DSR-051-05-045K - JEFFERSON PARISH

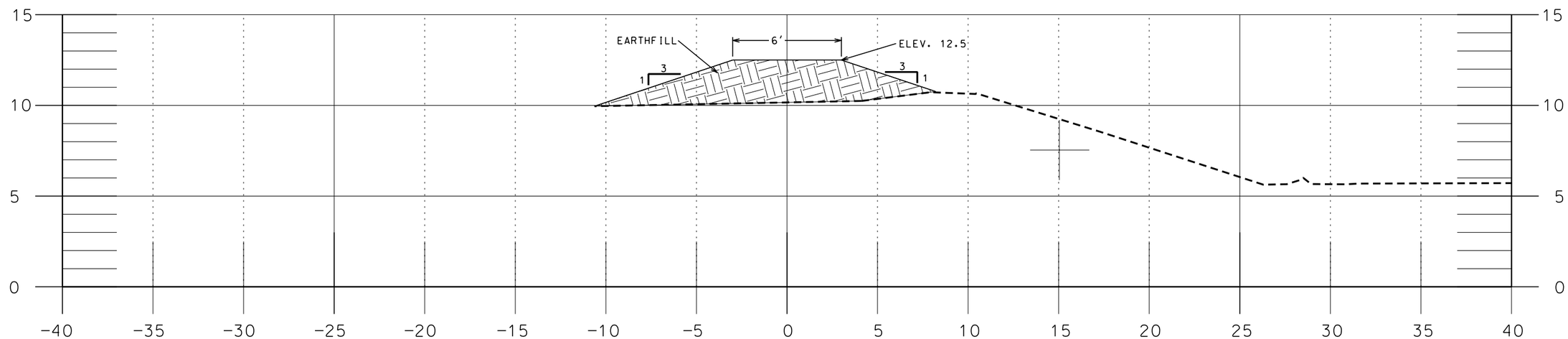

SITE #2-EARTHEN DIKE - STA. 0+90
DSR-051-05-045K - JEFFERSON PARISH

REVISIONS			
NO.	DATE	APPROVED	TITLE

		Date
Designed	CHERIE LAFLEUR	08/07
Drawn	ABBEY GREMILLION	08/07
Checked	CHERIE LAFLEUR	08/07
Approved	ED GIERING III	08/07

SITE#2-SECTIONS - STA. 0+80 & STA. 0+90
EWP - HURRICANE KATRINA
DSR-051-05-045K-LANDRY PUMP
JEFFERSON PARISH, LOUISIANA

NRCS
Natural Resources Conservation Service
United States Department of Agriculture

File Name
LA051-05-044K-17

Drawing Name
LA051-05-044K-17

Sheet 17 of 19

...\LA051-05-044K-17.dgn 11/29/2007 10:47:11 AM

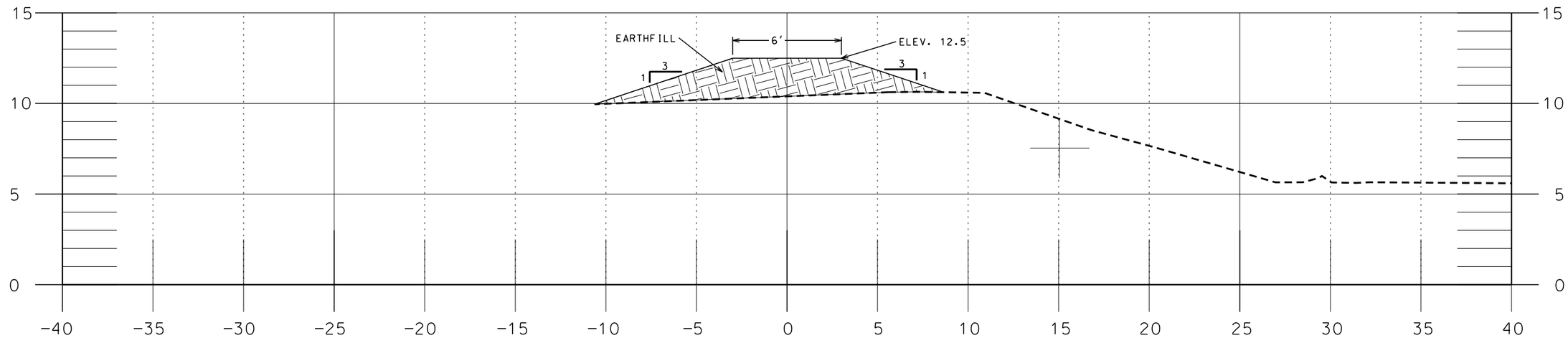

SITE #2-EARTHEN DIKE - STA. 1+00
DSR-051-05-045K - JEFFERSON PARISH

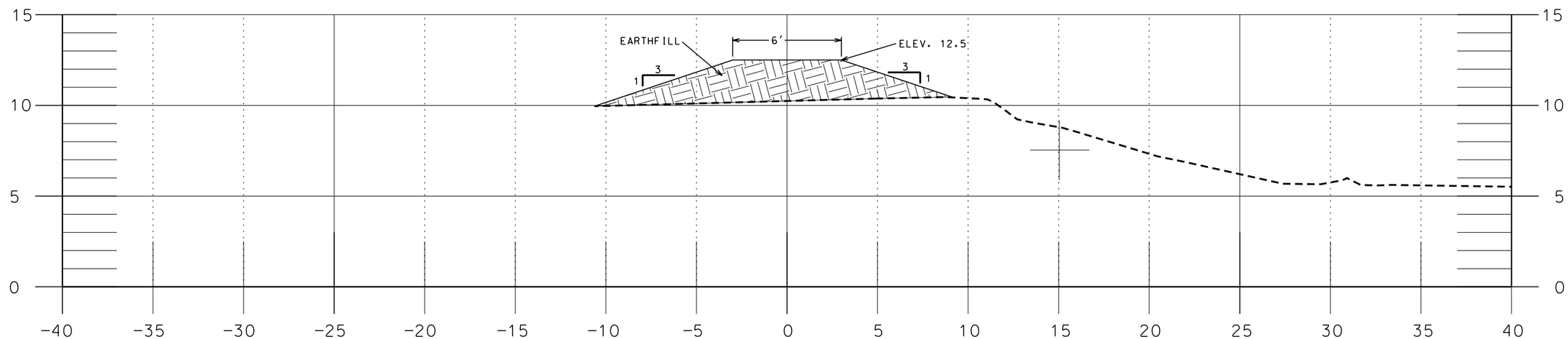

SITE #2-EARTHEN DIKE - STA. 1+10
DSR-051-05-045K - JEFFERSON PARISH

REVISIONS			
NO.	DATE	APPROVED	TITLE

		Date
Designed	CHERIE LAFLEUR	08/07
Drawn	ABBEY GREMILLION	08/07
Checked	CHERIE LAFLEUR	08/07
Approved	ED GIERING III	08/07

SITE#2-SECTIONS - STA. 1+00 & STA. 1+10
EWP - HURRICANE KATRINA
DSR-051-05-045K-LANDRY PUMP
JEFFERSON PARISH, LOUISIANA

NRCS
Natural Resources Conservation Service
United States Department of Agriculture

File Name
LA051-05-044K-18

Drawing Name
LA051-05-044K-18

Sheet 18 of 19

...\LA051-05-044K-18.dgn 11/29/2007 10:47:56 AM

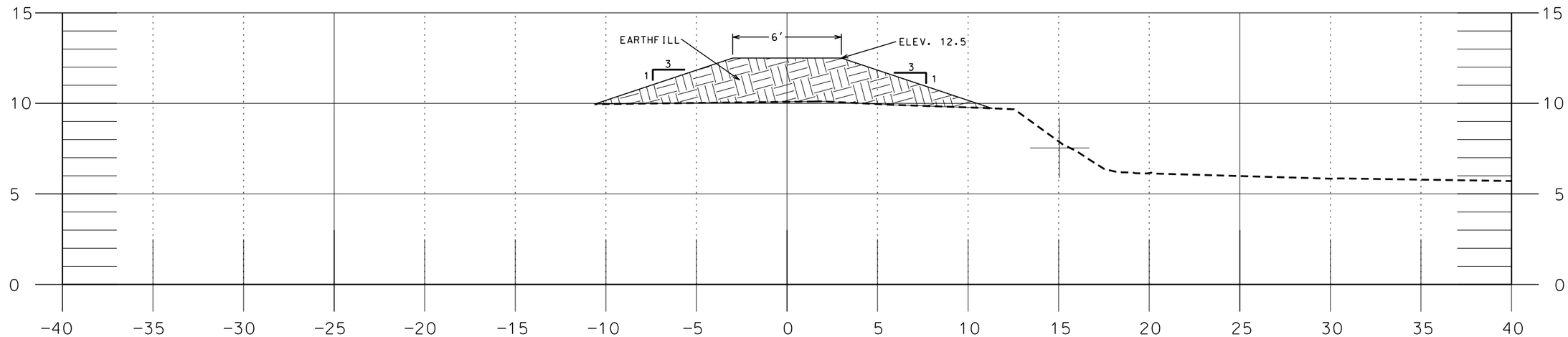

SITE #2-EARTHEN DIKE - STA. 1+18
DSR-051-05-045K - JEFFERSON PARISH

		Date
Designed	CHERIE LAFLEUR	08/07
Drawn	ABBEY GREMILLION	08/07
Checked	CHERIE LAFLEUR	08/07
Approved	ED GIERING III	08/07

SITE#2-SECTION - STA. 1+18
EWP - HURRICANE KATRINA
DSR-051-05-045K-LANDRY PUMP
JEFFERSON PARISH, LOUISIANA

NRCS
Natural Resources Conservation Service
United States Department of Agriculture

File Name
LA051-05-044K-19

Drawing Name
LA051-05-044K-19

Sheet 19 of 19

REVISIONS			
NO.	DATE	APPROVED	TITLE

...\LA051-05-044K-19.dgn 11/29/2007 10:48:32 AM