United States Department of Agriculture
Natural Resources Conservation Service

OMB No. 0578-0030
NRCS-PDM-20

DAMAGE SURVEY REPORT (DSR)
Emergency Watershed Protection Program – Recovery

Section 1A

NRCS Entry Only
Eligible: YES X NO ____
Approved: YES X NO ____
Funding Priority Number (from Section 4) 2e
Limited Resource Area: YES ____ NO X

Date of Report: 5/17/06

DSR Number: 071-05-004K Project Number: ____

Section 1B Sponsor Information

Sponsor Name: Sewerage and Water Board of New Orleans

Address: 8800 S. Claiborne Ave.

City/State/Zip: New Orleans, LA 70118

Telephone Number: 504-865-0660 Fax: 504-865-0663

Section 1C Site Location Information

County: Orleans State: LA Congressional District: 2

D/S End Latitude: 30.058 Longitude: -89.95495 Section: 6, 36 Township: 11S,12S Range: 12E
U/S End Latitude: 30.04249195 Longitude: -89.941932174
UTM Coordinates: 16

Drainage Name: Gannon Canal Reach: 6,950 LF (Morrison Canal to I-510 Service Road)

Damage Description: Sediment and Debris Removal

Section 1D Site Evaluation

All answers in this Section must be YES in order to be eligible for EWP assistance.

Site Eligibility	**YES**	**NO**	**Remarks**
Damage was a result of a natural disaster?*	X		
Recovery measures would be for runoff retardation or soil erosion prevention?*	X		
Threat to life and/or property?*	X		
Event caused a sudden impairment in the watershed?*	X		
Imminent threat was created by this event?**	X		
For structural repairs, not repaired twice within ten years?**	X		
Site Defensibility			
Economic, environmental, and social documentation adequate to warrant action? (Go to pages 3, 4, 5 and 6 ***)	X		
Proposed action technically viable? (Go to Page 9 ***)	X		

Have all the appropriate steps been taken to ensure that all segments of the affected population have been informed of the EWP program and its possible effects? YES X NO ____

Comments: ____

* Statutory
** Regulation
*** DSR Pages 3 through 6 and 9 are required to support the decisions recorded on this summary page. If additional space is needed on this or any other page in this form, add appropriate pages.1 of 14

DSR NO: ___071-05-004K _____

Section 1E Proposed Action

Describe the preferred alternative from Findings: Section 5 A:

The proposed action is the preferred alternative. The proposed action is the least costly alternative that achieves the restoration objectives, maximizes environmental benefits, and is socially acceptable.

Total installation cost identified in this DSR: Section 3:

Section 1F NRCS State Office Review and Approval

Reviewed By: _____ Date Reviewed: 3/24/07
State EWP Program Manager

Approved By: Donald W. Gohmert Date Approved: 3/26/07
State Conservationist

PRIVACY ACT AND PUBLIC BURDEN STATEMENT

NOTE: The following statement is made in accordance with the Privacy Act of 1974, (5 U.S.C. 552a) and the Paperwork Reduction Act of 1995, as amended. The authority for requesting the following information is 7 CFR 624 (EWP) and Section 216 of the Flood Control Act of 1950, Public Law 81-516, 33 U.S.C. 701b-1; and Section 403 of the Agricultural Credit Act of 1978, Public Law 95-334, as amended by Section 382, of the Federal Agriculture Improvement and Reform Act of 1996, Public Law 104-127, 16 U.S.C. 2203. EWP, through local sponsors, provides emergency measures for runoff retardation and erosion control to areas where a sudden impairment of a watershed threatens life or property. The Secretary of Agriculture has delegated the administration of EWP to the Chief or NRCS on state, tribal and private lands.

Signing this form indicates the sponsor concurs and agrees to provide the regional cost-share to implement the EWP recovery measure(s) determined eligible by NRCS under the terms and conditions of the program authority. Failure to provide a signature will result in the applicant being unable to apply for or receive a grant the applicable program authorities. Once signed by the sponsor, this information may not be provided to other agencies. IRS, Department of Justice, or other State or Federal Law Enforcement agencies, and in response to a court or administrative tribunal.

The provisions of criminal and civil fraud statutes, including 18 U.S.C. 286, 287, 371, 641, 651, 1001; 15 U.S.C. 714m; and 31 U.S.C. 3729 may also be applicable to the information provided. According to the Paperwork Reduction Act of 1995, an agency may not conduct or sponsor, and a person is not required to respond to a collection of information unless it displays a valid OMB control number. The valid OMB control number for this information collection is 0578-0030. The time required to complete this information collection is estimated to average 117/1.96 minutes/hours per response, including the time for reviewing instructions, searching existing data sources, field reviews, gathering, designing, and maintaining the data needed, and completing and reviewing the collection information.

USDA NONDISCRIMINATION STATEMENT

"The U.S. Department of Agriculture (USDA) prohibits discrimination in all its programs and activities on the basis of race, color, national origin, age, disability, and where applicable, sex, marital status, familial status, parental status, religion, sexual orientation, genetic information, political beliefs, reprisal, or because all or part of an individual's income is derived from any public assistance program. (Not all prohibited bases apply to all programs.)

Persons with disabilities who require alternative means for communication of program information (Braille, large print, audiotape, etc.) should contact USDA's TARGET Center at (202) 720-2600 (voice and TDD). To file a complaint of discrimination write USDA, Director of Civil Rights, 1400 Independence Avenue, SW, Washington, DC 20250-941 0 or call (800)795-3272 (voice) or (202)720-6382 (TDD). USDA is an equal opportunity provider and employer.

Civil Rights Statement of Assurance

The program or activities conducted under this agreement will be in compliance with the nondiscrimination provisions contained in the Titles VI and VII of the Civil Rights Act of 1964, as amended; the Civil Rights Restoration Act of 1987 (Public Law 100-259); and other nondiscrimination statutes: namely, Section 504 or the Rehabilitation Act of 1973, Title IX of the Amendments of 1972, the Age Discrimination Act of 1975, and the Americans with Disabilities Act of 1990. They will also be in accordance with regulations of the Secretary of Agriculture (7 CFR 15, 15a, and 15b), which provide that no person in the United States shall on the grounds of race, color, national origin, gender, religion, age or disability, be excluded from participation in, be denied the benefits of, or otherwise subjected to discrimination under any program or activity receiving Federal financial assistance from the U.S. Department of Agriculture or any agency thereof.

DSR NO: __071-05-004K _____

Section 2 Environmental Evaluation

2A Resource Concerns	2B Existing Condition	2C Alternatives and Effects		
		Proposed Action	**No Action**	**Alternative**
		Sediment Removal with Excavator	**Leave Sediment in Channel.**	**Sediment Removal with Vacuum Truck**
		2D Effects of Alternatives		
Soil				
Channel Sediment	Sediment on bottom of channel from storm deposition.	Restore natural channel bottom depth and substrate.	Sediment on bottom of channel from storm deposition.	Restore natural channel bottom depth and substrate.
Water				
Downstream Water Rights	Will not have to drain channel to conduct repairs	No Effect	No Effect	No Effect
Turbidity	Increased turbidity decreasing water transparency due to sediment in channel.	Long term improvement, short term increases in turbidity	Increased turbidity decreasing water transparency due to sediment in channel.	Long term improvement, short term increases in turbidity
Air				
Emissions	Attainment	Attainment	Attainment	Attainment
Particulate Matter	Attainment	Attainment	Attainment	Attainment
Plant				
Aquatic Veg.	Poor due to decreased water transparency	Improved due to improved water transparency	Poor due to decreased water transparency	Improved due to improved water transparency
Emergent Health/Vigor	Poor due to steep slope and reduced emergent substrate	No emergent habitat with steep slope.	Poor due to steep slope and reduced emergent substrate	No emergent habitat with steep slope.
Riparian Veg.	Mixed Non-native grasses	Riparian Vegetation Unaffected	Mixed Non-native grasses	Riparian Vegetation Unaffected
Animal				
Fish habitat	Decreased due to increased turbidity and increased sedimentation	Improved water quality, decreased sedimentation	Decreased due to increased turbidity and increased sedimentation	Decreased due to elevated water temperatures and lack of riparian habitat.
Wading Bird Habitat	Decreased due to steep slope	Little change in shallow water habitat.	Decreased due to steep slope	Reduced wading bird habitat due to reduced riparian vegetation
Domestic and Migratory Waterfowl	Poor habitat due to steep slope	Narrow strip of riparian vegetation established above structure.	Poor habitat due to steep slope	Reduced waterfowl habitat due to reduced riparian vegetation
Other				
Aesthetics	Unsightly exposed slope	Improved	Unsightly exposed slope	Slight improvement to slight impairment

Section 2E Special Environmental Concerns

Resource Consideration	Existing Condition	Alternatives and Effects		
		Proposed Action	No Action	Alternative
Clean Water Act Waters of the U.S.	USACE Jurisdiction. No permit required.	Improved water quality. Would require a CWA permit from USACE.	Decreased water quality. No permit required.	Improved water quality. Would require a permit CWA from USACE.
Coastal Zone Management Areas	The area is within the Coastal Zone Management Area (CZMA). Drainage impaired.	Consistency authorization needed.	No authorization needed.	Consistency authorization needed.
Coral Reefs	N/A (FOTG II)	N/A	N/A	N/A
Cultural Resources	(FOTG II) None observed onsite. Cross reference with state leader.	(FOTG II) None observed onsite. Cross reference with state leader.	(FOTG II) None observed onsite. Cross reference with state leader.	(FOTG II) None observed onsite. Cross reference with state leader.
Endangered and Threatened Species	(FOTG II) (Federal and State Lists) None observed, 3 known, 2 possible T&E species.	(FOTG II) (Federal and State Lists) None observed, 3 known, 2 possible T&E species.	(FOTG II) (Federal and State Lists) None observed, 3 known, 2 possible T&E species.	(FOTG II) (Federal and State Lists) None observed, 3 known, 2 possible T&E species.
Environmental Justice	N/A (FOTG II)	N/A	N/A	N/A
Essential Fish Habitat	(FOTG II & NOAA) No EFH	(FOTG II & NOAA) No EFH	(FOTG II & NOAA) No EFH	(FOTG II & NOAA) No EFH
Fish and Wildlife Coordination	State level review with USFWS and LDWF. Consultation not required for sediment removal.	State level review with USFWS and LDWF. Consultation not required for slope repair.	State level review with USFWS and LDWF. Consultation not required for slope repair.	State level review with USFWS and LDWF. Consultation not required for slope repair..
Floodplain Management	All project sites are located within the 100 year floodplain.	Maintenance of canals and levees prevents frequent flooding.	Maintenance of canals and levees prevents frequent flooding.	Maintenance of canals and levees prevents frequent flooding.
Invasive Species	Alligator weed and Johnson grass is prevalent.	Increased spreading of Johnson grass due to exposed slope.	Invasive plants remain and may spread without management.	Increased spreading of Johnson grass due to exposed slope.
Migratory Birds	Mowed grass does not provide migratory bird habitat. Open water channel - no impact.	Mowed grass does not provide migratory bird habitat. Open water channel - no impact.	Mowed grass does not provide migratory bird habitat. Open water channel - no impact.	Mowed grass does not provide migratory bird habitat. Open water channel - no impact.
Natural Areas	None present (FOTG II)	None present (FOTG II)	None present (FOTG II)	None present (FOTG II)
Prime and Unique Farmlands	None present (FOTG II)	None present (FOTG II)	None present (FOTG II)	None present (FOTG II)
Riparian Areas	No riparian habitat is present due to steep bank.	Limited amount of riparian habitat could be established.	No riparian habitat is present due to steep bank.	Limited amount of riparian habitat could be established.
Scenic Beauty	(FOTG II) None present	(FOTG II) None present	(FOTG II) None present	(FOTG II) None present
Wetlands	Open water containing floating aquatics, algae, few emergent plants, litter.	Open water containing floating aquatics, algae, few emergent plants, litter. No impacts.	Open water containing floating aquatics, algae, few emergent plants, litter. No impacts.	Open water containing floating aquatics, algae, few emergent plants, litter. No impacts.
Wild and Scenic Rivers	(FOTG II) (LDWF scenic streams list) Not Listed.	(FOTG II) (LDWF scenic streams list) Not Listed.	(FOTG II) (LDWF scenic streams list) Not Listed.	(FOTG II) (LDWF scenic streams list) Not Listed.

Completed By: _____Kris Davis_____ Date: _____5/24/06_____

DSR NO: ___071-05-004K **_____**

Section 2F Economic

This section must be completed by each alternative considered (attach additional sheets as necessary).

	Future Damages ($)	Damage Factor (%)	Near Term Damage Reduction
Properties Protected (Private)			
Houses 357 @ $60,000	**$21,420,000**	**25**	**$5,355,000**
(684 x 52.25% = 357)			
Properties Protected (Public)			
Business Losses			
Other			
		Near Term Damage Reduction	**$5,355,000**
		Net Benefit (Total Near Term Damage Reduction Minus Cost From Sec. 3)	

Completed By: H McDaniel/ K Stilley Date: 3-8-07

THE ABOVE DATA IS BASED ON THE 2000 US CENSUS, AMERICAN FACT FINDER DATA FOR 55% OF 33.3% OF 17.32 G5, AND 66.7% OF 17.40 G1 CENSUS BLOCKS. THERE IS A TOTAL OF 684 HOUSEHOLDS IN THE EFFECTED AREA WITH A TOTAL OF 1827 PEOPLE. IT IS ESTIMATED THAT 52.25% OF THE POPULATION WILL BE RETURNING AS SHOWN ON ATTACHED LETTER FROM SEWERAGE AND WATER BOARD OF NEW ORLEANS. BASED ON THIS, THE NUMBER OF HOUSEHOLDS IN THE AREA IS EQUAL TO 357. SEE DEMOGRAPHIC WORKSHEET IN SECTION SIX

BASED ON INFORMATION PREVIOUSLY ENTERED BY ALAN BOLOTTE THE DWELLINGS ARE ALL SINGLE HOUSES VALUED AT APPROXIMATELY $60,000 EACH

Section 2G Social Consideration

This section must be completed by each alternative considered (attach additional sheets as necessary).

	YES	NO	Remarks
Has there been a loss of life as a result of the watershed impairment?		X	
Is there the potential for loss of life due to damages from the watershed impairment?	X		
Has access to a hospital or medical facility been impaired by watershed impairment?	X		Flooding of streets may make streets impassable
Has the community as a whole been adversely impacted by the watershed impairment (life and property ceases to operate in a normal capacity)?	X		
Is there a lack or has there been a reduction of public safety due to watershed impairment?	X		Flooding may restrict access for fire, police, ambulance and other emergency services

Completed By: H McDaniel Date: 3-8-07

DSR NO: _____071-05-004K _____

Section 2H Group Representation and Disability Information

This section is completed only for the preferred alternative selected.

Group Representation	Number
American Indian/Alaska Native Female Hispanic	0
American Indian/Alaska Native Female Non-Hispanic	2
American Indian/Alaska Native Male Hispanic	0
American Indian/Alaska Native Male Non-Hispanic	1
Asian Female Hispanic	1
Asian Female Non-Hispanic	33
Asian Male Hispanic	1
Asian Male Non-Hispanic	29
Black or African American Female Hispanic	10
Black or African American Female Non-Hispanic	404
Black or African American Male Hispanic	9
Black or African American Male Non-Hispanic	364
Hawaiian Native/Pacific Islander Female Hispanic	0
Hawaiian Native/Pacific Islander Female Non-Hispanic	6
Hawaiian Native/Pacific Islander Male Hispanic	0
Hawaiian Native/Pacific Islander Male Non-Hispanic	5
White Female Hispanic	1
White Female Non-Hispanic	38
White Male Hispanic	1
White Male Non-Hispanic	34
Total Group	939

Census tract(s) US Census Bureau, American Fact Finder, Orleans Parish, 2000, 55% of (33.3% of 17.32 & 66.7% of 17.40 G1)

Completed By: _H McDaniel, Date: _3-8-2007

The total population from the census data for the area affected is 1827. When 52.25% of the population returning as shown on the enclosed letter from the sewerage and water board of New Orleans is applied, the total population used in this DSR is 955 people. Figures shown in 2H do not include “Some other race alone” and “population of two or more races”

SEE DEMOGRAPHICS WORKSHEET IN SECTION SIX

Section 2I. Required consultation or coordination between the lead agency and/or the RFO and another governmental unit including tribes:

Easements, permissions, or permits:

Access permission will be required.

CWA permit prior to construction in channel is needed.

Water Quality Certification is needed.

A consistency authorization is needed since project location is in the coastal zone.

Mitigation Description:

Construction will be done in consecutive days to minimize impacts to local wildlife.

Re-seed construction areas to NRCS Standard and Specification 342 to minimize run-off effects and provide vegetative riparian buffer.

Agencies, persons, and references consulted, or to be consulted:

U.S. Army Corps of Engineers

LDWF

Orleans Parish

LDNR

Private Landowners

LDEQ

DSR NO: ___071-05-004K _____

Section 3 Engineering Cost Estimate

Completed By: ____Cherie LaFleur ___ Date: ___3/7/2007_____

This section must be completed by each alternative considered (attach additional sheets as necessary).

Proposed Recovery Measure (including mitigation)	Quantity	Units	Unit Cost ($)	Amount ($)
Mobilization	1	LS	35,000.00	
Traffic Control	1	LS	5,000.00	
Sediment Removal – Haul 50% off-site	25484	CY	27.50	
Seeding and Mulching	5	AC	1200.00	
Total Installation Cost (Enter in Section 1F)$				

Alternative Recovery Measure (including mitigation)	Quantity	Units	Unit Cost ($)	Amount ($)
Mobilization	1	LS	58,000.00	
Traffic Control	1	LS	5,000.00	
Sediment Removal – Haul 100% off-site	25484	CY	45.00	
Seeding and Mulching	5	AC	1200.00	
Total Installation Cost (Enter in Section 1F)$				

Unit Abbreviations:
AC Acre
CY Cubic Yard
EA Each
HR Hour
LF Linear Feet
LS Lump Sum
SF Square Feet
SY Square Yard
TN Ton
Other (Specify)

Section 4 NRCS EWP Funding Priority

Complete the following section to compute the funding priority for the recovery measures in this application
(see instructions on page 10).

Priority Ranking Criteria	**Yes**	**No**		**Ranking Number Plus Modifier**
1. Is this an exigency situation?		X		
2. Is this a site where there is serious, but not immediate threat to human life?	X			2e
3. Is this a site where buildings, utilities, or other important infrastructure components are threatened?		X		
4. Is this site a funding priority established by the NRCS Chief?		X		
The following are modifiers for the above criteria			**Modifier**	
a. Will the proposed action or alternatives protect or conserve federally-listed threatened and endangered species or critical habitat?				
b. Will the proposed action or alternatives protect or conserve cultural sites listed on the National Register of Historic Places?				
c. Will the proposed action or alternatives protect or conserve prime or important farmland?				
d. Will the proposed action or alternatives protect or conserve existing wetlands?				
e. Will the proposed action or alternatives maintain or improve current water quality conditions?			e	
f. Will the proposed action or alternatives protect or conserve unique habitat, including but not limited to, areas inhabited by State-listed species, fish and wildlife management area, or State identified sensitive habitats?				

Enter priority computation in Section 1A, NRCS Entry, Funding priority number.

Remarks:

DSR NO: ___071-05-004K _____

Section 5A Findings

Finding: Indicate the preferred alternative from Section 2 (Enter to Section 1E):

The proposed action is the preferred alternative and includes excavation and removal of the sediment and debris from within the channel. The sediment will be spoiled on the top bank and debris will be hauled to a landfill. The proposed action is the least costly alternative that achieves the restoration objectives, maximizes environmental benefits, and is socially acceptable.

I have considered the effects of the action and the alternatives on the Environmental Economic, Social; the Special Environmental Concerns; and the extraordinary circumstances (40 CFR 1508.27). I find for the reasons stated below, that the preferred alternative:

_X_ Has been sufficiently analyzed in the EWP PEIS (reference all that apply)
Chapter 5.2.2.1.2
Chapter _____
Chapter _____
Chapter _____
Chapter _____

____ May require the preparation of an environmental assessment or environmental impact statement. The action will be referred to the NRCS State Office on this date:

NRCS representative of the DSR team

Title: Michael Lorbani Date: 3/15/07.

Section 5B Comments:

Section 5C **Sponsor Concurrence:** Marcia G. St Martin

Sponsor Representative

Title: Executive Director Date: 3/15/2007

Section 6 Attachments:

A. Location Map
B. Site Plan or Sketches
C. Other (explain)

GANNON CANAL
DSR-071-05-004K

EMERGENCY REPAIR
BUILT UNDER THE
EMERGENCY WATERSHED PROTECTION PROGRAM
BY SEWERAGE & WATER BOARD OF NEW ORLEANS
WITH THE ASSISTANCE OF THE
NATURAL RESOURCES CONSERVATION SERVICE
OF THE
UNITED STATES DEPARTMENT OF AGRICULTURE
2007

MAPS COPYRIGHT "THE ROADS OF LOUISIANA", SHEARER PUBLISHING

VICINITY MAP
DSR-071-05-004K

5000 0 5000 10000 15000 20000
SCALE IN FEET

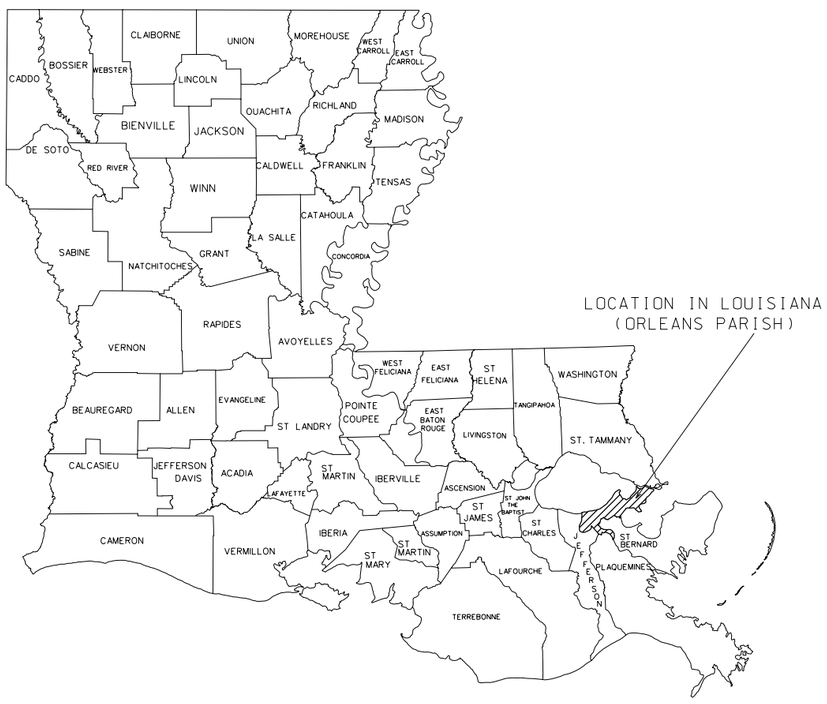

INDEX OF DRAWINGS

1. COVER SHEET AND VICINITY MAP
2. PLAN & PROFILE ON CENTERLINE PAGE 1
3. PLAN & PROFILE ON CENTERLINE PAGE 2
4. TYPICAL SEDIMENT & DEBRIS REMOVAL
5. X-SECTIONS-STATION 1·18 THRU 11·20
6. X-SECTIONS-STATION 20·62 THRU 24·41
7. X-SECTIONS-STATION 34·69 THRU 44·49
8. X-SECTIONS-STATION 54·81 THRU 65·52
9. X-SECTIONS-STATION 68·01
10. DISPOSAL MAP

REVISIONS			
NO.	DATE	APPROVED	TITLE

		DATE
DESIGNED	C. E. LAFLEUR	08/06
DRAWN	B. VIERS	05/07
CHECKED	C. LAFLEUR	05/07
APPROVED	E.J. GIERING III	05/07

COVER SHEET & VICINTY MAP
EWP - HURRICANE KATRINA
DSR-071-05-004K GANNON CANAL
ORLEANS PARISH, LOUISIANA

NRCS
Natural Resources Conservation Service
United States Department of Agriculture

FILE NAME
GANNON CANAL

DRAWING NAME
7105004K01

SHEET 01 OF 10

...\7105004K01.dgn 8/7/2007 6:11:10 AM

CHANNEL C/L LOCATION

BEGIN CONSTRUCTION	END CONSTRUCTION
STA.0-24	STA.69+50
N569177.06 E3716854.16	N563617.87 E3721057.73

PLAN VIEW
DSR-071-05-004K

100 0 100 200 300 400
SCALE IN FEET

ACCESS PROBLEM AREA

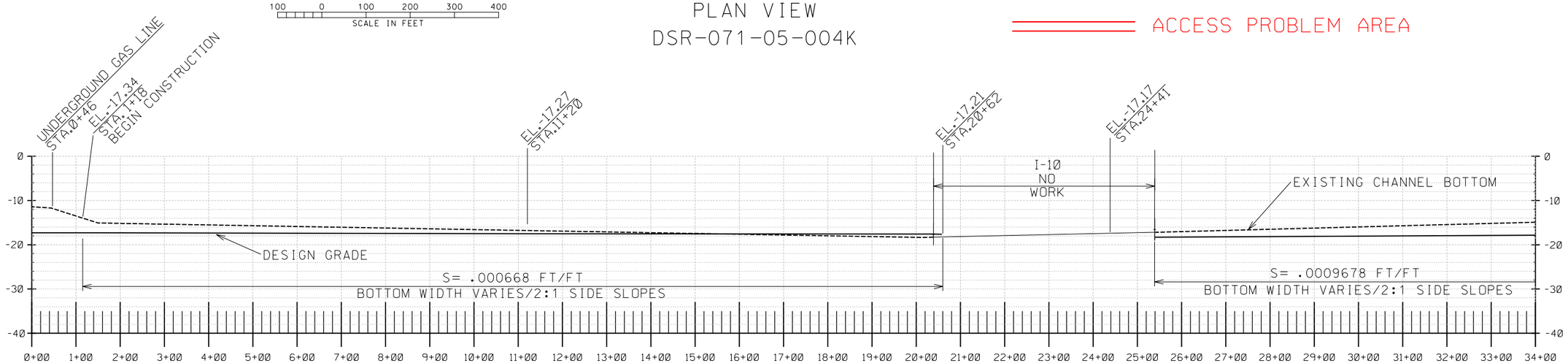

CENTERLINE PROFILE
DSR-071-05-004K

NOTES:

1. SOUTHERN WORK LIMIT IS THE OUTLET OF CULVERT UNDER I-510 SERVICE ROAD.
2. NORTHERN WORK LIMIT IS WHERE GANNON CANAL ENTERS MORRISON CANAL.
3. THE CHANNEL BOTTOM WIDTH IS ESTIMATED. ACTUAL BOTTOM WIDTHS VARY BASED ON SITE CONDTIONS. TOP OF BANK AND EXISTING SLOPES SHALL REMAIN ABOVE THE NORMAL WATERLINE ELEVATION. BELOW THE NORMAL WATERLINE, CONSTRUCTED SLOPES SHALL BE EXCAVATED AT A 2 HORIZONTAL TO 1 VERTICAL SLOPE UNTIL DESIGN INVERT GRADE IS REACHED. THE ACTUAL CHANNEL BOTTOM WIDTH WILL BE THE DISTANCE REMAINING BETWEEN THE SIDE SLOPES AT THE DESIGN INVERT ELEVATION AND MAY NOT BE THE ORIGINAL ESTIMATED BOTTOM WIDTH.
4. PERMANENT STRUCTURES SHALL NOT BE REMOVED OR DAMAGED BY THE CONTRACTOR.

ESTIMATED QUANTITIES		
Sediment Removal	:	20,000 CY
Debris Removal	:	6500 LF

Horizontal datum is state plane
Louisiana - South NSD 83.

REVISIONS			
NO.	DATE	APPROVED	TITLE

		DATE
DESIGNED	B. Viers	05/07
DRAWN	B. Viers	05/07
CHECKED	C. LAFLEUR	05/07
APPROVED	E.J. Giering III	05/07

PLAN & PROFILE ON CENTERLINE
DSR-071-05-004K - GANNON CANAL
EWP - HURRICANE KATRINA
ORLEANS PARISH, LOUISIANA

NRCS
Natural Resources Conservation Service
United States Department of Agriculture

FILE NAME
7105004K02

DRAWING NAME
PLAN 2

SHEET 02 OF 10

...\7105004K02.dgn 8/7/2007 6:12:19 AM

100 0 100 200 300 400
SCALE IN FEET

PLAN VIEW
DSR-071-05-004K

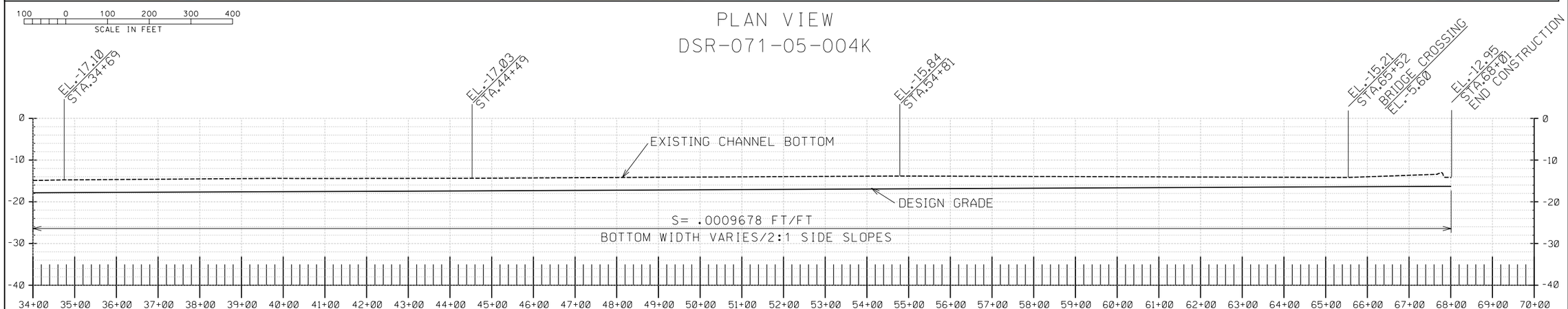

CENTERLINE PROFILE
DSR-071-05-004K

TBM #1 = X ON CONCRETE SLAB SOUTH
OF I-10 SERVICE ROAD @
BERG CANAL
N 564069.518
E 3714145.568
ELEV. -3.676

ESTIMATED QUANTITIES		
Sediment Removal	:	20,000 CY
Debris Removal	:	6500 LF

Vertical Scale
1"=30'

Horizontal Scale
1"=300'

REVISIONS			
NO.	DATE	APPROVED	TITLE

		DATE
DESIGNED	B. Viers	05/07
DRAWN	B. Viers	05/07
CHECKED	C. LAFLEUR	05/07
APPROVED	E.J. Giering III	05/07

PLAN & PROFILE ON CENTERLINE
DSR-071-05-004K - GANNON CANAL
EWP - HURRICANE KATRINA
ORLEANS PARISH, LOUISIANA

NRCS
Natural Resources Conservation Service
United States Department of Agriculture

FILE NAME
7105004K03

DRAWING NAME
PLAN 3

SHEET 03 OF 10

...\7105004K03.dgn 8/7/2007 6:12:59 AM

NOTICE:
96 HOURS BEFORE DIGGING
CALL 1-800-272-3020

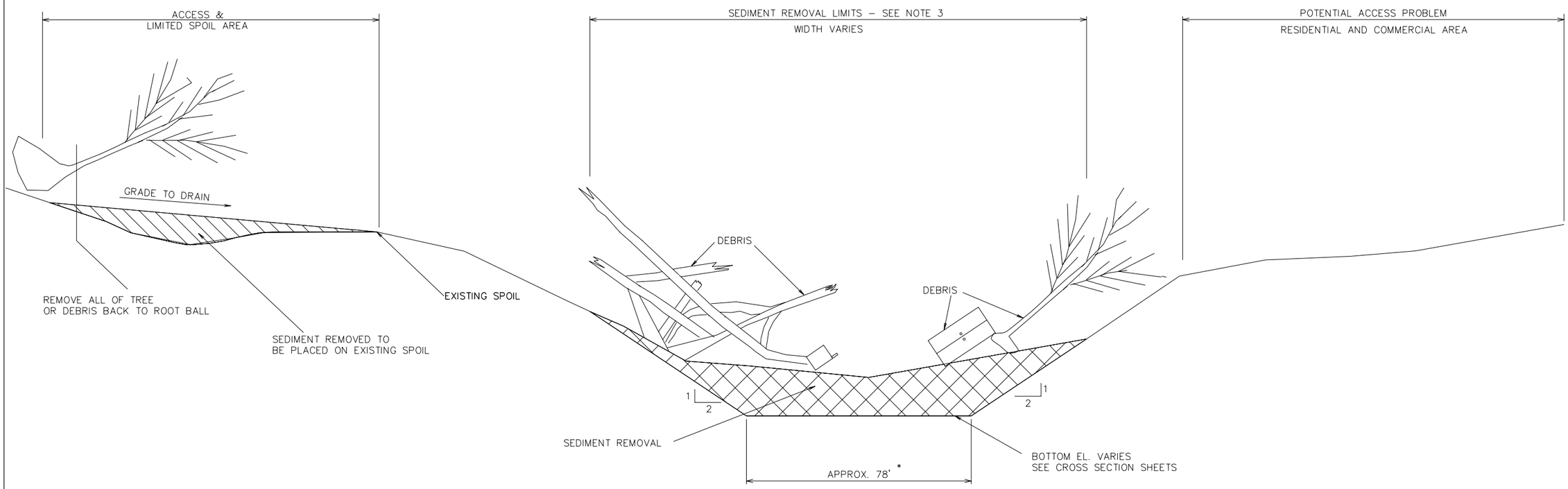

TYPICAL CHANNEL SEDIMENT & DEBRIS REMOVAL

N.T.S

NOTES

1. ALL NON-SEDIMENT DEBRIS WITHIN THE WORK/REMOVAL LIMITS SHALL BE REMOVED, LOADED, AND HAULED TO AN APPROPRIATE DISPOSAL SITE AS REQUIRED IN CONSTRUCTION SPECIFICATION 203, CHANNEL OBSTRUCTION REMOVAL.
2. IT MAY BE POSSIBLE THAT TREES OR DEBRIS WHICH WERE LOCATED OUTSIDE OF THE REMOVAL LIMITS HAVE FALLEN INTO THE REMOVAL LIMITS. SUCH TREES SHALL BE CUT BACK TO THE ROOT BALL AND REMOVED IN THEIR ENTIRETY.
3. ALL SEDIMENT SHALL BE REMOVED FROM WITHIN THE SEDIMENT REMOVAL LIMITS AS SHOWN ON THIS SHEET AND ON THE CROSS SECTION SHEETS. EXCAVATED SEDIMENT (SPOIL) SHALL BE PLACED AS SHOWN AND AS REQUIRED IN CONSTRUCTION SPECIFICATION 202, CHANNEL EXCAVATION. SOME OF THE REMOVED SEDIMENT MAY HAVE TO BE DISPOSED OF OFF-SITE.
4. CLEARING OF UNDAMAGED WOODY VEGETATION ON THE EXISTING SPOIL BANKS SHALL BE LIMITED TO ONLY THAT NECESSARY FOR PLACEMENT OF THE REMOVED SEDIMENTS WITHIN THE RIGHT-OF-WAY. LIVING LIVE OAK TREES SHALL NOT BE DAMAGED OR REMOVED. SPOIL SHALL NOT BE PLACED WITHIN THE DRIP LINE OF ANY LIVE OAK TREE. SPOIL PLACED OUTSIDE THE DRIP LINE OF ANY LIVE OAK TREE SHALL BE DRESSED AND GRADED SO THAT POSITIVE DRAINAGE IS MAINTAINED AWAY FROM THE LIVE OAK TREE. NO WATER SHALL BE ALLOWED TO POND AROUND ANY LIVE OAK TREE. COTR APPROVAL IS REQUIRED TO CLEAR UNDAMAGED VEGETATION.
5. THE CHANNEL BOTTOM WIDTH IS ESTIMATED BASED ON PAST PLANS. ACTUAL BOTTOM WIDTHS WILL VARY BASED ON SITE CONDITIONS. TOP OF BANK AND EXISTING SLOPES SHALL REMAIN ABOVE THE NORMAL WATERLINE ELEVATION. BELOW THE NORMAL WATERLINE, CONSTRUCTED SLOPES SHALL BE EXCAVATED AT A 2 HORIZONTAL TO 1 VERTICAL SLOPE UNTIL DESIGN INVERT GRADE IS REACHED. THE ACTUAL CHANNEL BOTTOM WIDTH WILL BE THE DISTANCE REMAINING BETWEEN THE SIDESLOPES AT THE DESIGN INVERT ELEVATION AND MAY NOT BE THE ORIGINAL ESTIMATED BOTTOM WIDTH.

DISPOSAL SITES – JAHNCKE P.S. TO MORRISON
(HAYNES TO MORRISON – EAST SIDE ONLY)
–MORRISON TO CITRUS P.S.
–OLD SEWER TREATMENT PLANT (OFF OLD GENTILLY)
SEE SHEET 10 OF 10 FOR DISPOSAL SITE LOCATIONS.

REVISIONS			
NO.	DATE	APPROVED	TITLE

DESIGNED B. VIERS 05/07
DRAWN B. VIERS 05/07
CHECKED C. LAFLEUR 05/07
APPROVED E.J. GIERING III 05/07

TYPICAL-DEBRIS & SEDIMENT REMOVAL
DSR-071-05-004K
CHANNEL DEBRIS AND SEDIMENT REMOVAL
GANNON CANAL
ORLEANS PARISH, LOUISIANA

NRCS
Natural Resources Conservation Service
United States Department of Agriculture

FILE NAME
Typical Section

DRAWING NAME
071-05-004K-04

SHEET 4 OF 10

...\7105004K04.dgn 8/7/2007 6:14:02 AM

NOTE: EXCAVATION LIMITS ARE ESTIMATES ONLY.
SEDIMENT MAY HAVE SHIFTED BETWEEN
CROSS-SECTIONS, BUT TOTAL ESTIMATED VOLUME
OF REMOVAL DOES NOT CHANGE.

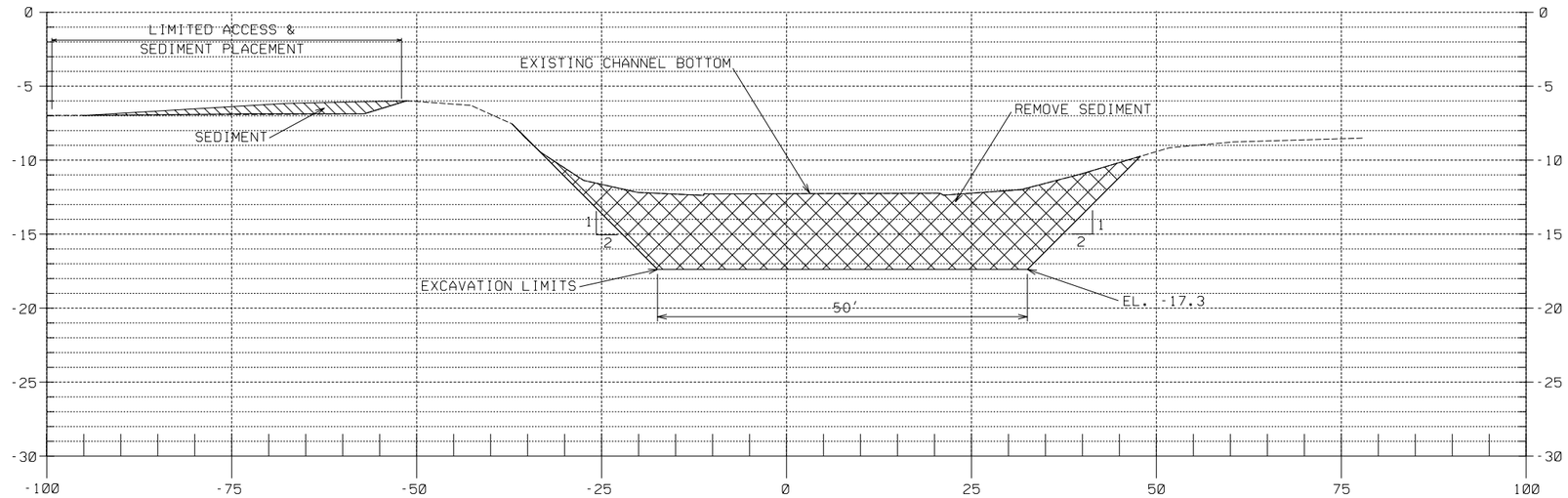

STATION 0+58

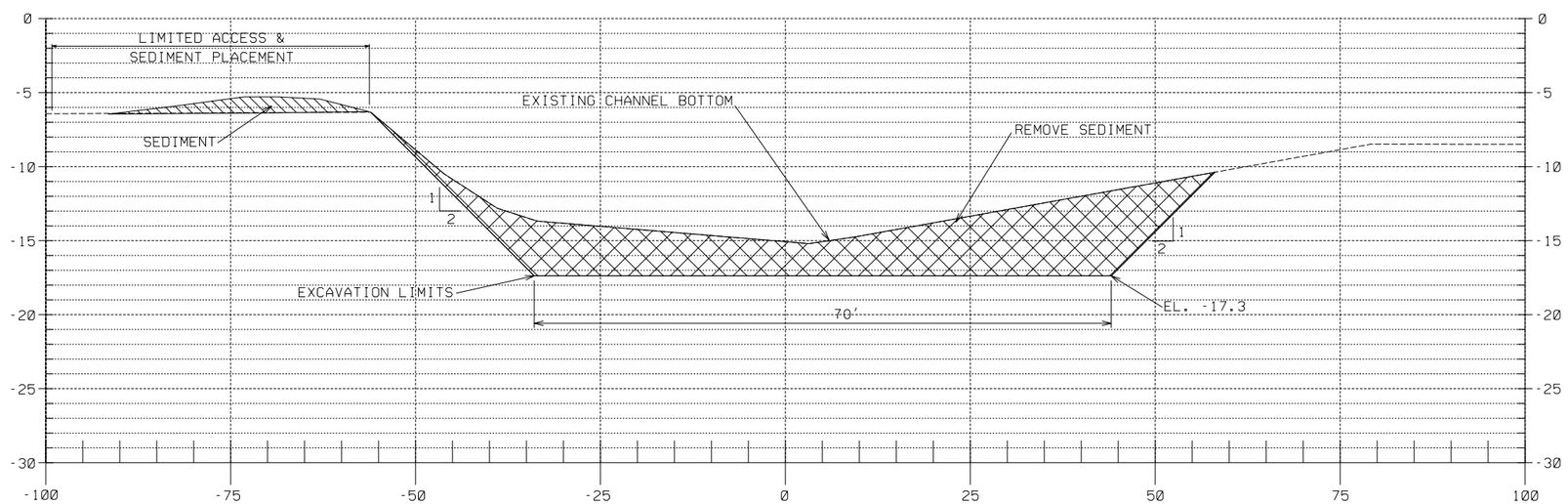

STATION 1+50

REVISIONS			
NO.	DATE	APPROVED	TITLE

		DATE
DESIGNED	B. VIERS	5/07
DRAWN	K. SCHWEIKERT	5/07
CHECKED	C. LAFLEUR	5/07
APPROVED	E.J. GIERING III	5/07

X-SECTIONS
DSR-071-05-004K
CHANNEL DEBRIS AND SEDIMENT REMOVAL
GANNON CANAL STATION 0+58 TO 1+50
ORLEANS PARISH, LOUISIANA

NRCS
Natural Resources Conservation Service
United States Department of Agriculture

FILE NAME
GANNON CANAL

DRAWING NAME
071-05-004K-05

SHEET 05 OF 10

...\7105004K05.dgn 8/7/2007 6:16:34 AM

NOTE: EXCAVATION LIMITS ARE ESTIMATES ONLY.
SEDIMENT MAY HAVE SHIFTED BETWEEN
CROSS-SECTIONS, BUT TOTAL ESTIMATED VOLUME
OF REMOVAL DOES NOT CHANGE.

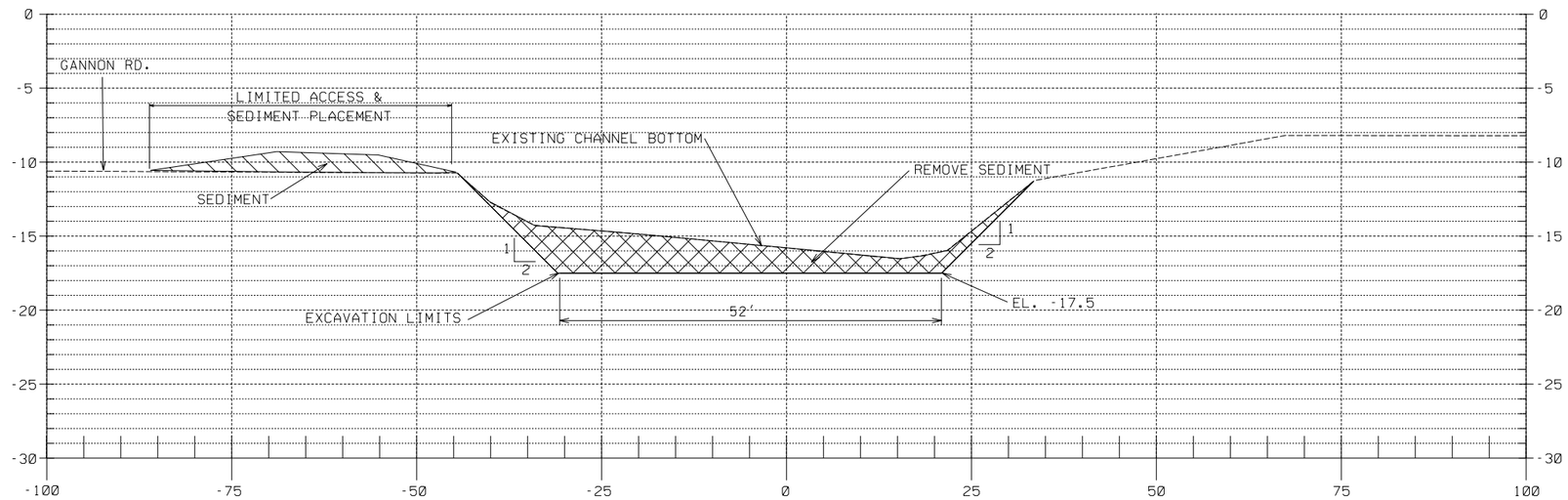

STATION 11+20

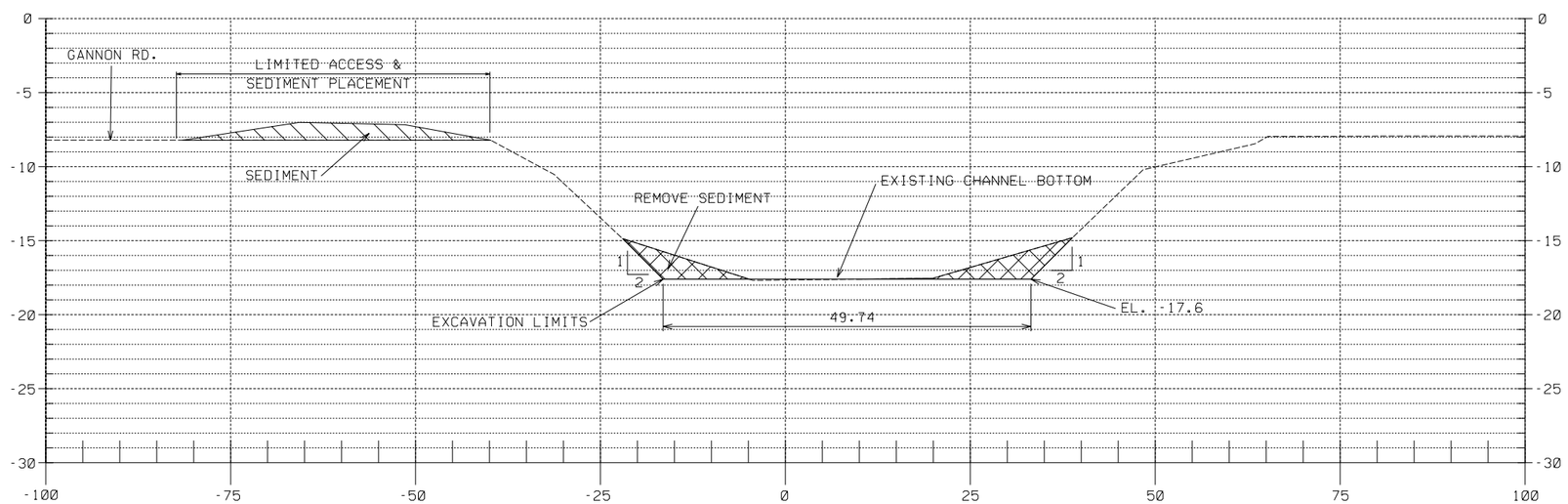

STATION 20+62

REVISIONS			
NO.	DATE	APPROVED	TITLE

		DATE
DESIGNED	B. VIERS	5/07
DRAWN	K. SCHWEIKERT	5/07
CHECKED	C. LAFLEUR	5/07
APPROVED	E.J. GIERING III	5/07

X-SECTIONS
DSR-071-05-004K
CHANNEL DEBRIS AND SEDIMENT REMOVAL
GANNON CANAL STATION 11+20 TO 20+62
ORLEANS PARISH, LOUISIANA

NRCS
Natural Resources Conservation Service
United States Department of Agriculture

FILE NAME
GANNON CANAL

DRAWING NAME
071-05-004K-06

SHEET 06 OF 10

...\7105004K06.dgn 8/7/2007 6:17:30 AM

NOTE: EXCAVATION LIMITS ARE ESTIMATES ONLY.
SEDIMENT MAY HAVE SHIFTED BETWEEN
CROSS-SECTIONS, BUT TOTAL ESTIMATED VOLUME
OF REMOVAL DOES NOT CHANGE.

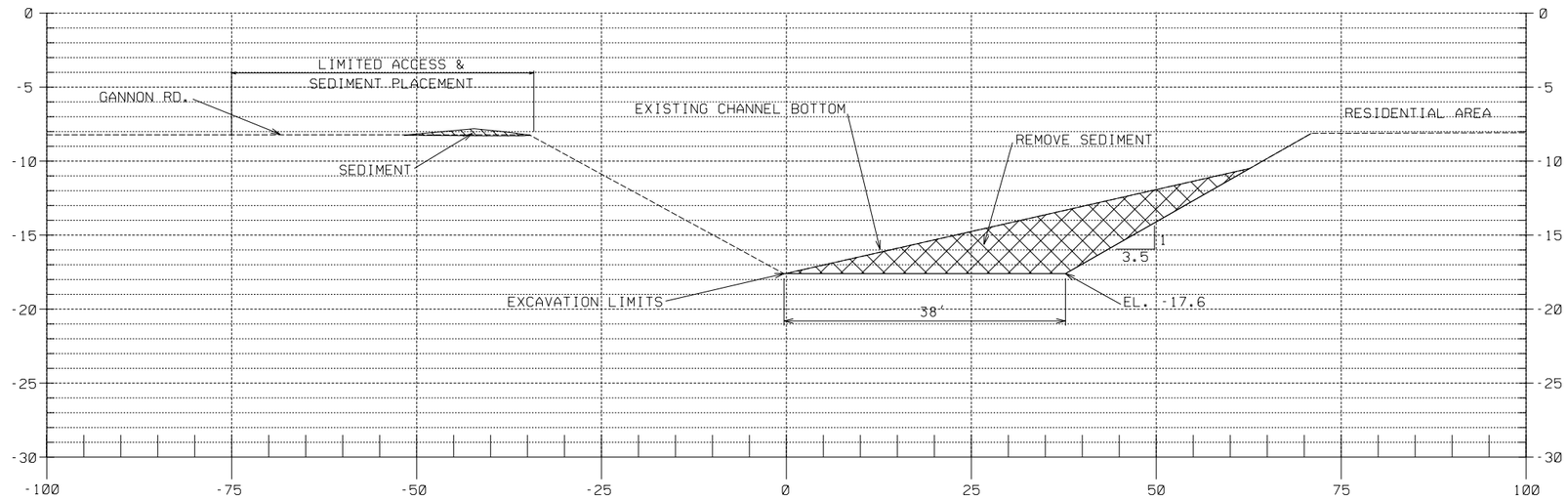

STATION 21+37

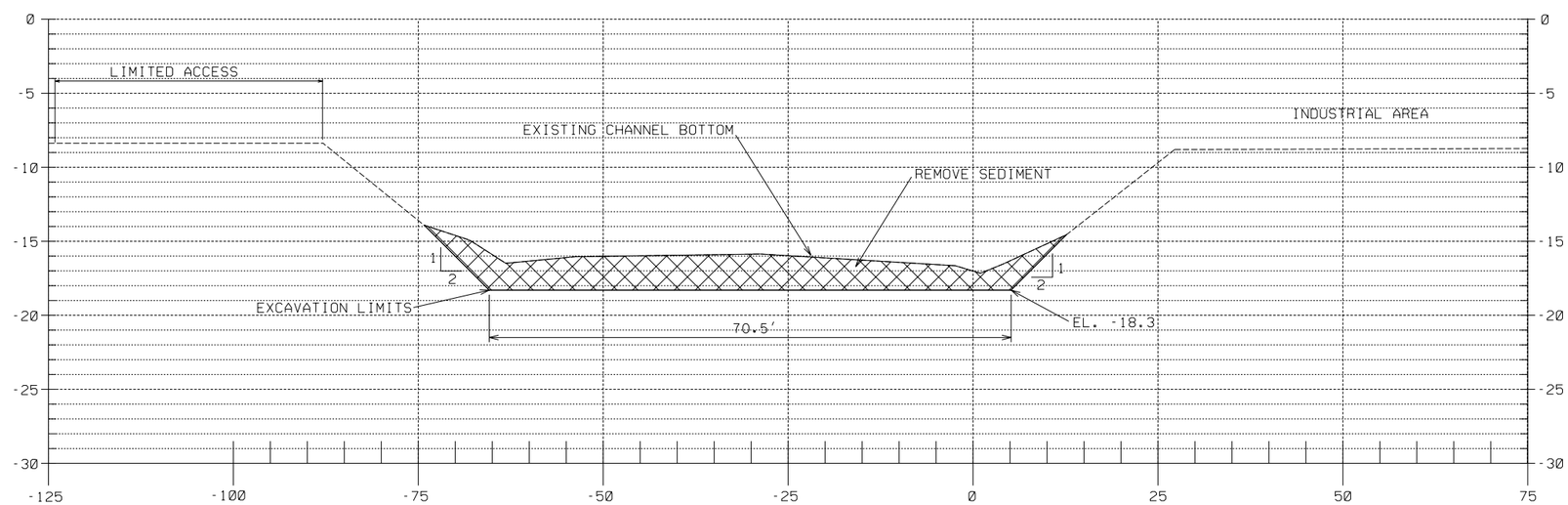

STATION 25+39

REVISIONS			
NO.	DATE	APPROVED	TITLE

		DATE
DESIGNED	B. VIERS	5/07
DRAWN	K. SCHWEIKERT	5/07
CHECKED	C. LAFLEUR	5/07
APPROVED	E.J. GIERING III	5/07

X-SECTIONS
DSR-071-05-004K
CHANNEL DEBRIS AND SEDIMENT REMOVAL
GANNON CANAL STATION 21+37 TO 25+39
ORLEANS PARISH, LOUISIANA

NRCS
Natural Resources Conservation Service
United States Department of Agriculture

FILE NAME
GANNON CANAL

DRAWING NAME
071-05-004K-07

SHEET 07 OF 10

...\7105004K07.dgn 8/7/2007 6:18:13 AM

NOTE: EXCAVATION LIMITS ARE ESTIMATES ONLY.
SEDIMENT MAY HAVE SHIFTED BETWEEN
CROSS-SECTIONS, BUT TOTAL ESTIMATED VOLUME
OF REMOVAL DOES NOT CHANGE.

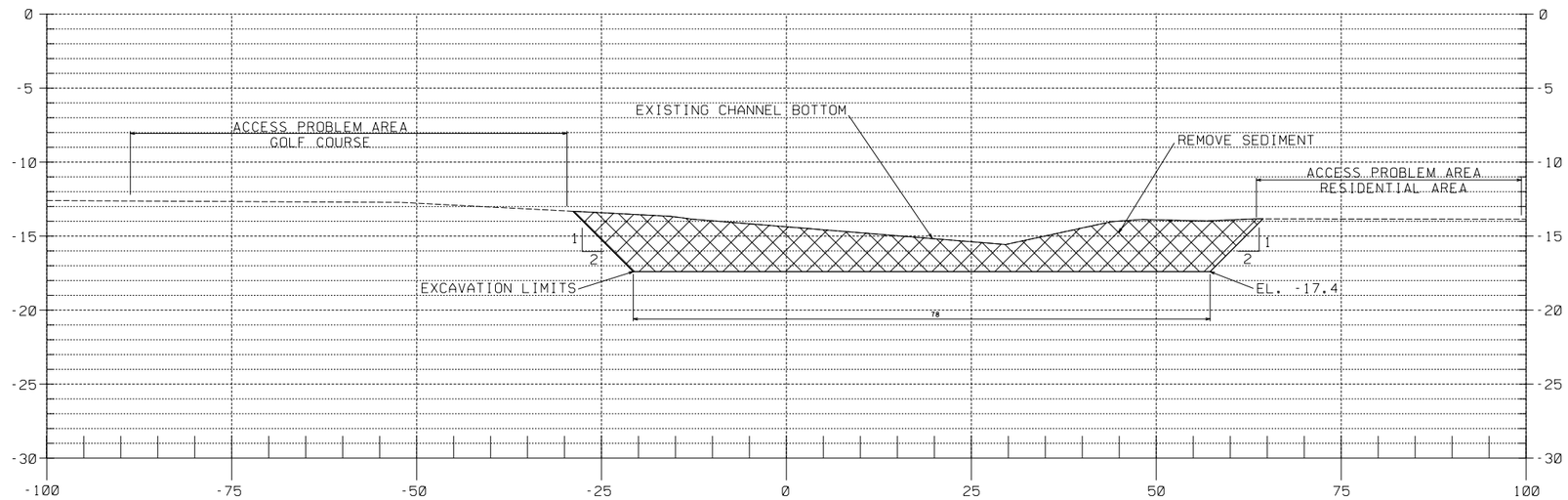

STATION 44+49

NOTICE:
96 HOURS BEFORE DIGGING
CALL 1-800-272-3020

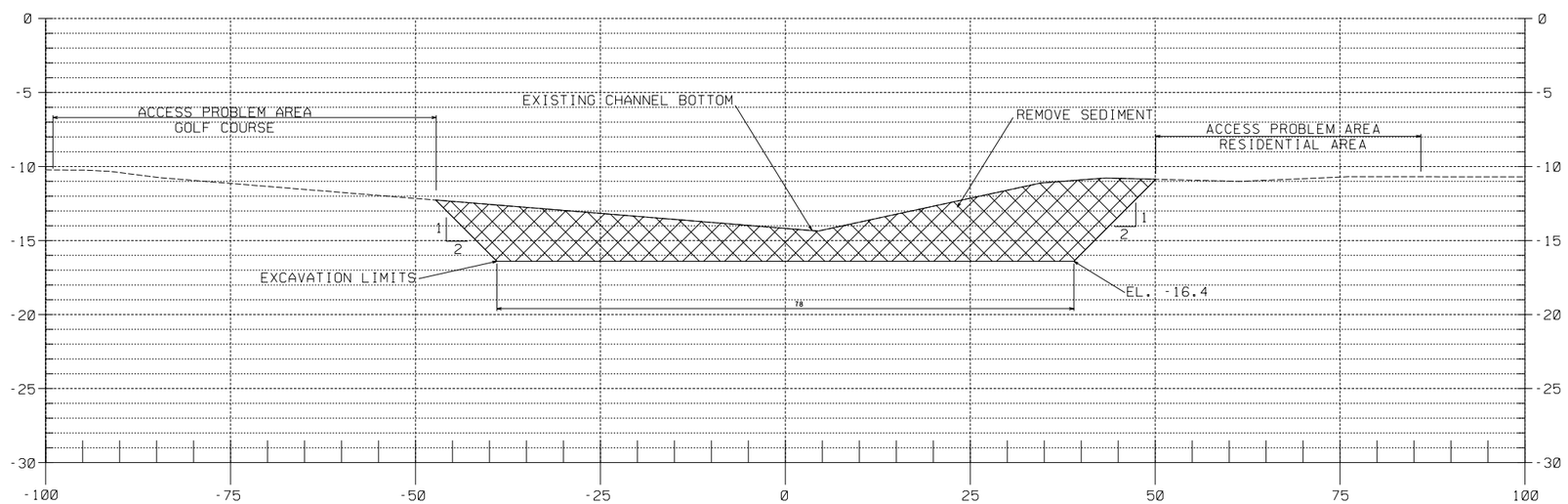

STATION 65+52

REVISIONS			
NO.	DATE	APPROVED	TITLE

		DATE
DESIGNED	B. VIERS	5/07
DRAWN	K. SCHWEIKERT	5/07
CHECKED	C. LAFLEUR	5/07
APPROVED	E.J. GIERING III	5/07

X-SECTIONS
DSR-071-005-004K
CHANNEL DEBRIS AND SEDIMENT REMOVAL
GANNON CANAL STATION 44+49 TO 65+52
ORLEANS PARISH, LOUISIANA

NRCS
Natural Resources Conservation Service
United States Department of Agriculture

FILE NAME
GANNON CANAL

DRAWING NAME
071-05-004K-08

SHEET 08 OF 10

...\7105004K08.dgn 8/7/2007 6:18:54 AM

NOTE: EXCAVATION LIMITS ARE ESTIMATES ONLY.
SEDIMENT MAY HAVE SHIFTED BETWEEN
CROSS-SECTIONS, BUT TOTAL ESTIMATED VOLUME
OF REMOVAL DOES NOT CHANGE.

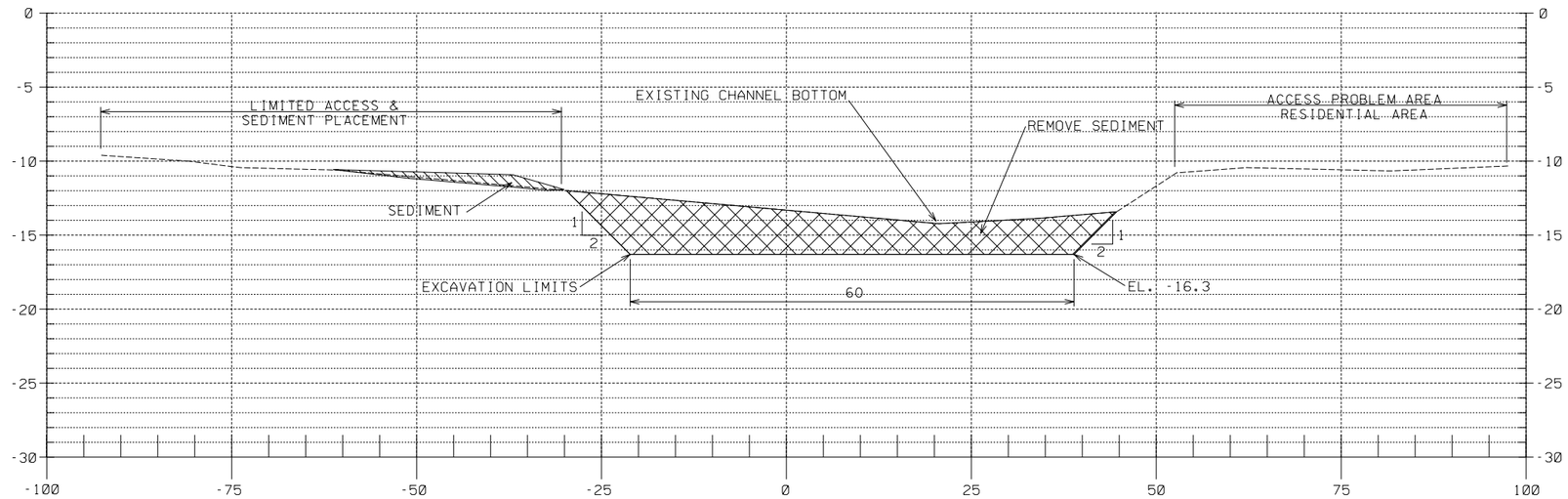

STATION 67+69

NOTICE:
96 HOURS BEFORE DIGGING
CALL 1-800-272-3020

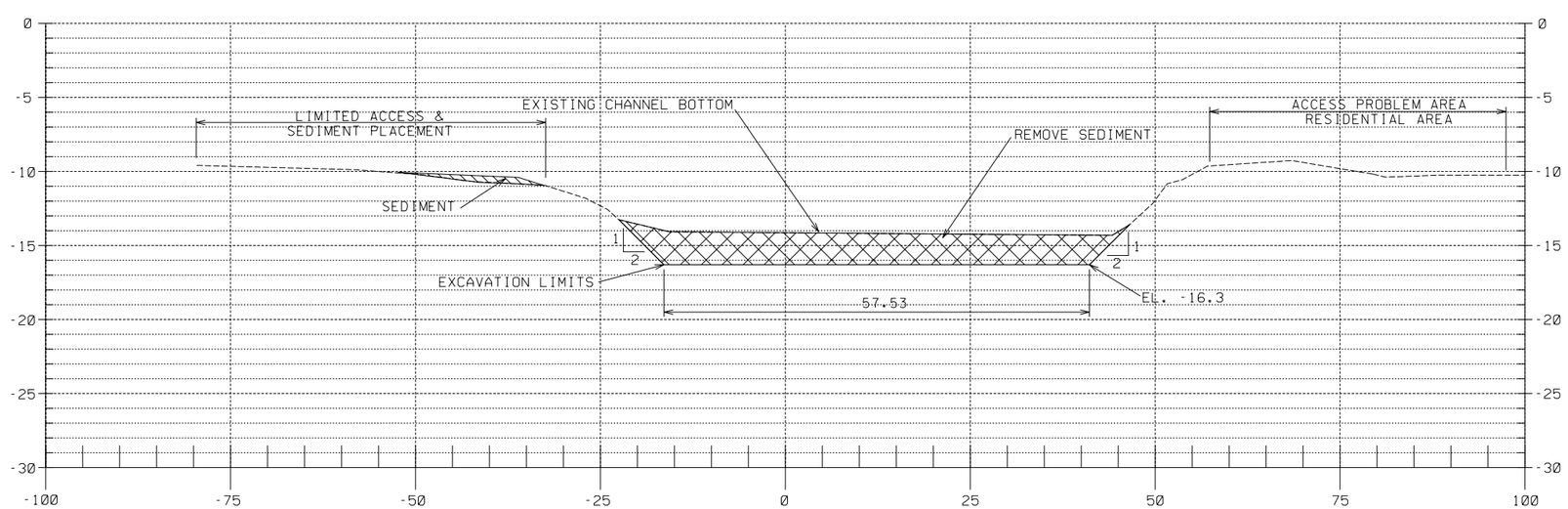

STATION 68+01

REVISIONS			
NO.	DATE	APPROVED	TITLE

DESIGNED B. VIERS DATE 5/07
DRAWN K. SCHWEIKERT 5/07
CHECKED C. LAFLEUR 5/07
APPROVED F.J. GIERING III 5/07

X-SECTIONS
DSR-071-05-004K
CHANNEL DEBRIS AND SEDIMENT REMOVAL
GANNON CANAL STATION 67+69 TO 68+01
ORLEANS PARISH, LOUISIANA

NRCS
Natural Resources Conservation Service
United States Department of Agriculture

FILE NAME
GANNON CANAL

DRAWING NAME
071-05-004K-09

SHEET 09 OF 10

...\7105004K09.dgn 8/7/2007 6:19:35 AM

REVISIONS			
NO.	DATE	APPROVED	TITLE

		DATE
DESIGNED	C. LAFLEUR	7/07
DRAWN	P. CAMP/J. FREDERICK	7/07
CHECKED	C. LAFLEUR	7/07
APPROVED	E. J. GIERING III	7/07

DISPOSAL SITE LOCATION MAP
EWP - HURRICANE KATRINA
DSR-071-05-004K (GANNON CANAL)
ORLEANS PARISH, LOUISIANA

NRCS
Natural Resources Conservation Service
United States Department of Agriculture

FILE NAME
GANNON CANAL

DRAWING NAME
071-05-004K-02

SHEET 10 OF 10

...\7105004K10.dgn 8/7/2007 6:10:05 AM

DSR 071-05-004K
Gannon Canal
Orleans Parish, LA

CONSTRUCTION SPECIFICATIONS

NUMBER	TITLE	PAGE	THROUGH
5	Pollution Control	5-1	5-7
SWPPP	Draft Storm Water Pollution Prevention Plan	SWPPP-1	SWPPP-8
NOI	Notice of Intent (NOI) LAR 100000	1 of 12	12 of 12
NOT	Notice of Termination (NOT) LAR 100000	1 of 1	1 of 1
6	Seeding, Sprigging and Mulching	6-1	6-5
7	Construction Surveys	7-1	7-6
8	Mobilization and Demobilization	8-1	8-2
9	Traffic Control	9-1	9-4
202	Channel Excavation, Sediment Removal	202-1	202-4
203	Channel Obstruction Removal	203-1	203-4

DRAWINGS	1 of 10	10 of 10
SPECIAL PROVISIONS	1 of 2	2 of 2

SPECIAL PROVISIONS

1. Not all pipelines and other utilities are shown on the plans. It is the responsibility of the contractor to contact **Louisiana One Call at 1-800-272-3020** and the appropriate owner of any utility within the work area to assist him/her in the location of unmarked utilities prior to the start of his/her work. **The contractor shall provide the COTR the Louisiana One Call ticket number prior to the start of any excavation activities.**

2. **Abandoned Vehicle Point of Contact** - At least 24 hours prior to the removal of an abandoned vehicle or vessel such as automobiles, trailers, motorcycles, boats, etc from the channel, notification shall be made to City's Junked and Abandoned Vehicle Unit at 504-658-8200.

   The following vehicle descriptive and location information shall be provided during the notification process:

   Boats – size, color, and street address or cross streets of boat location.

   Automobiles – make, model, color, license plate number (if available) and street address or cross streets of automobile location.

3. When performing work in the vicinity of utilities and/or other structures the contractor shall take extreme care not to damage said utilities and/or structures. Any damages resulting from improper construction will be the responsibility of the contractor, and repairs of such damages will be made by the contractor at his/her expense. The contractor shall further restore at his/her own expense all injured property caused by any negligent act of omission or commission on his/ her part or on the part of his/her agent, including sidewalks, curbing, sodding, shrubs, pipes, conduits, sewers, buildings, fences, property boundary markers, bridges, retaining walls, tanks, power lines, levees or any other building or private property to a condition as good as it was when he/she entered upon the right of way.

4. The convenience of the general public and of residents along the work shall be provided for in a reasonably adequate and satisfactory manner. Where existing roads are not available for use as detours, all traffic shall be permitted to pass through the work. In such cases the vehicles of the traveling public shall have precedence over the contractor's vehicles to the end that the traveling public's vehicles shall not be unduly delayed for the convenience of the contractor. The contractor shall provide and station competent flagmen whose sole duties shall consist of directing and controlling the movement of public traffic either through or around the work. A flagman shall also be stationed wherever equipment, trucks, etc., enter or leave a thoroughfare from the construction area. The design and application of all signals, pavement markings, channelizing devices and warning sign shall conform to the most current edition, as revised of the "Louisiana Manual on Uniform Traffic Control Devices.".

5. The contractor shall arrange his/her work so that no undue or prolonged blocking of business establishments or private residences will occur. Material and equipment stored on the right of way and project site shall be so placed, and the work at all times shall be so conducted, as to insure minimum danger and obstruction to the traveling public.

6. In the event of any adverse weather condition such as a tropical storm, the contractor shall take the necessary precautions to insure that his equipment will not decrease the capacity of any drainage channels in the vicinity or damage any pumping stations or protection levees in the vicinity of his construction operations. Pumping stations, bridges or other structures shall not be utilized as mooring anchorages for equipment.

7. When transporting equipment, supplies, and material to and from the construction site, the contractor shall take the most direct route when leaving a major thoroughfare. When transporting high water content spoil the contractor shall utilize "water tight" trailers to prevent leakage of the material

outside of the project work limits. The contractor shall be responsible for the clean up and proper disposal of leaked or spilled materials from his equipment.

8. Fire hydrants shall be accessible at all times to the Fire Department. No materials or other obstructions shall be placed closer to a fire hydrant than permitted by ordinances, rules or regulations. In the absence of such ordinances, rules or regulations, obstructions shall not be placed within fifteen (15) feet of a fire hydrant.
9. Material Certifications shall be provided to the Government Representative for all materials used in this contract prior to installation.

Construction Specification 5—Pollution Control

1. Scope

The work consists of installing measures or performing work to control erosion and minimize the production of sediment and other pollutants to water and air from construction activities.

2. Material

All material furnished shall meet the requirements of the material specifications listed in section 8 of this specification.

3. Erosion and sediment control measures and works

The measures and works shall include, but are not limited to, the following:

Staging of earthwork activities—The excavation and moving of soil materials shall be scheduled to minimize the size of areas disturbed and unprotected from erosion for the shortest reasonable time.

Seeding—Seeding to protect disturbed areas shall occur as soon as reasonably possible following completion of that earthwork activity.

Mulching—Mulching to provide temporary protection of the soil surface from erosion.

Diversions—Diversions to divert water from work areas and to collect water from work areas for treatment and safe disposition. They are temporary and shall be removed and the area restored to its near original condition when the diversions are no longer required or when permanent measures are installed.

Stream crossings—Culverts or bridges where equipment must cross streams. They are temporary and shall be removed and the area restored to its near original condition when the crossings are no longer required or when permanent measures are installed.

Sediment basins—Sediment basins collect, settle, and eliminate sediment from eroding areas from impacting properties and streams below the construction site(s). These basins are temporary and shall be removed and the area restored to its original condition when they are no longer required or when permanent measures are installed.

Sediment filters—Straw bale filters or geotextile sediment fences trap sediment from areas of limited runoff. Sediment filters shall be properly anchored to prevent erosion under or around them. These filters are temporary and shall be removed and the area restored to its original condition when they are no longer required or when permanent measures are installed.

Waterways—Waterways for the safe disposal of runoff from fields, diversions, and other structures or measures. These works are temporary and shall be removed and the area restored to its original condition when they are no longer required or when permanent measures are installed.

Other—Additional protection measures as specified in section 8 of this specification or required

by Federal, State, or local government.

4. Chemical pollution

The contractor shall provide watertight tanks or barrels or construct a sump sealed with plastic sheets to dispose of chemical pollutants, such as drained lubricating or transmission fluids, grease, soaps, concrete mixer washwater, or asphalt, produced as a by-product of the construction activities. At the completion of the construction work, sumps shall be removed and the area restored to its original condition as specified in section 8 of this specification. Sump removal shall be conducted without causing pollution.

Sanitary facilities, such as chemical toilets, or septic tanks shall not be located next to live streams, wells, or springs. They shall be located at a distance sufficient to prevent contamination of any water source. At the completion of construction activities, facilities shall be disposed of without causing pollution as specified in section 8 of this specification.

5. Air pollution

The burning of brush or slash and the disposal of other materials shall adhere to state and local regulations.

Fire prevention measures shall be taken to prevent the start or spreading of wildfires that may result from project activities. Firebreaks or guards shall be constructed and maintained at locations shown on the drawings.

All public access or haul roads used by the contractor during construction of the project shall be sprinkled or otherwise treated to fully suppress dust. All dust control methods shall ensure safe construction operations at all times. If chemical dust suppressants are applied, the material shall be a commercially available product specifically designed for dust suppression and the application shall follow manufacturer's requirements and recommendations. A copy of the product data sheet and manufacturer's recommended application procedures shall be provided to the engineer 5 working days before the first application.

6. Maintenance, removal, and restoration

All pollution control measures and temporary works shall be adequately maintained in a functional condition for the duration of the construction period. All temporary measures shall be removed and the site restored to near original condition.

7. Measurement and payment

Method 1—For items of work for which specific unit prices are established in the contract, each item is measured to the nearest unit applicable. Payment for each item is made at the contract unit price for that item. For water or chemical suppressant items used for dust control for which items of work are established in section 8 of this specification, measurement for payment will not include water or chemical suppressants that are used inappropriately or excessive to need. Such payment will constitute full compensation for the completion of the work.

Method 2—For items of work for which lump sum prices are established in the contract, payment is made as the work proceeds and supported by invoices presented by the contractor that reflect actual costs. If the total of all progress payments is less than the lump sum contract price for this item, the balance remaining for this item will be included in the final contract payment. Payment of the lump sum contract price will constitute full compensation for completion of the

work.

Method 3—For items of work for which lump sum prices are established in the contract, payment will be prorated and provided in equal amounts on each monthly progress payment estimate. The number of months used for prorating shall be the number estimated to complete the work as outlined in the contractor's approved construction schedule. The final month's prorate amount will be provided with the final contract payment. Payment as described will constitute full compensation for completion of the work.

All Methods—The following provisions apply to all methods of measurement and payment. Compensation for any item of work described in the contract, but not listed in the bid schedule is included in the payment for the item of work to which it is made subsidiary. Such items, and the items to which they are made subsidiary, are identified in section 8 of this specification.

8. Items of work and construction details

(See next page.)

8. ITEMS OF WORK AND CONSTRUCTION DETAILS

It has been determined that this project falls under the jurisdiction of the LDEQ Louisiana Pollution Discharge Elimination System (LPDES), and that a Storm Water Pollution Prevention Plan is required for this project since the disturbed area will be greater than 5 acres in size. Please note that the rules for LPDES process relative to construction sites are contained in the LAC Title 33:IX.2341. Rules for storm water discharges associated with construction sites covered by general permits are found in LAC Title 33:IX.2345.

Items of work to be performed in conformance with this specification and the construction details therefore are:

a. Subsidiary Item, Pollution Control

(1) This item shall consist of all work necessary to control erosion and sediment pollution, chemical pollution, water pollution, and air pollution during the period of this contract. The Contractor shall perform the work in a manner that will reduce erosion, minimize sediments and other pollutants to the water and streams, and create a minimum of air pollution. As a part of this requirement, a Storm Water Pollution Prevent Plan shall (SWPPP) be developed by the Contractor in compliance with the following sections.

(2) SWPPP Requirements

A. General SWPPP Requirements

The contents of the SWPPP shall address all of the applicable items identified in Part IV of Permit No. LAR100000. Attached is a draft copy of an SWPPP the Contractor may use to develop the site specific SWPPP for implementation on this contract.

B. Scope

The purpose of the SWPPP is to control soil erosion and the resulting sediment from leaving the project work area and prevent pollution of any water body caused by the runoff from the area of construction activities under this contract, under the terms of Permit No. LAR100000. The Contractor shall develop a site specific SWPPP that corresponds with the proposed construction activities by type and time of occurrence, and implement the SWPPP in a manner which will meet the requirements Permit No. LAR 100000. The Contractor shall also assure that all subcontractors have reviewed the plan and that they comply with its provisions.

C. Definitions

Construction Owner – The construction owner is the party that has operational control over plans and specification including the ability to make changes to those items. The Natural Resources Conservation Service is the construction owner.

Construction Operator – The construction operator is the party having day-to-day operational control over those activities at a project site that are necessary to ensure compliance with the SWPPP or other permit conditions. The Contractor is the construction operator.

Notice of Intent (NOI) – A document that is completed and submitted to the Louisiana Department of Environmental Quality (LDEQ) as application for coverage to discharge under the Permit No. LAR100000.

Notice of Termination (NOT) – A document that is completed and submitted to the Louisiana Department of Environmental Quality (LDEQ) to terminate permission to discharge under the Permit No. LAR100000. The NOT should be filed when the

Contractor (permittee) is no longer the Construction Operator of the contract, or when termination of stormwater discharge has been accomplished.

D. Notice of Intent (NOI)

The Government will submit an NOI to the LDEQ as application for the Government's coverage under the terms of the Permit No. LAR100000. If a specific LPDES permit applicable to this construction has been received from the LDEQ in response to the NOI, a copy of the permit, as well as a copy of the Government's NOI will be provided to the Contractor at the Pre-Construction Conference. The Contractor shall make site specific modifications necessary to the attached preliminary SWPPP, attach the Construction Operator certification statement provided, and certify by signing the statement as the Construction Operator. The Contractor shall submit a NOI to the LDEQ as application for his/her coverage under the terms of Permit No. LAR100000 prior to the initiation any construction activities. Certified mail is recommended for the Contractor's proof of submittal. A copy of the Contractor's NOI submittal shall be provided to the Contracting Officer at the time of submittal. LDEQ will provide a LPDES permit to the Contractor in response to the NOI submitted. Then NOI's of the Contractor and the Government, as well as the specific permits in response to the NOI, shall be posted at the job site by the Contractor.

E. Record Retention Requirements

Records of the NOT as well as any data used to complete it, the SWPPP, and any reports required by Permit No. LAR100000 shall be retained by the Contractor (permittee) for at least three years from the date that the site is finally stabilized. Certification of the SWPPP by the Contractor or any sub-contractor is required in accordance with Permit No. LAR10000.

F. Plan Accessibility

The Contractor shall post a notice near the main entrance of the construction site with the following information:

- The LDPES permit number (LAR100000) and effective date of this permit
- The name and telephone number of a local contact person
- A brief description of the project
- The location of the SWPPP

A copy of the SWPPP required by the permit, including a copy of the permit language shall be retained at the construction site from the date of construction initiation to the date of stabilization. The Contractor (permittee) with day-to-day operational control over the SWPPP implementation shall have a copy of the plan available at a central location on-site for the use of operators and those identified as having responsibilities under the plan.

G. LDEQ Correspondence

Any written correspondence concerning the NOI, NOT, SWPPP, or discharges covered under Permit No. LAR100000, shall be identified by permit number, if one has been assigned, and a copy provided to the Contracting Officer. LDEQ mailing address is as follows:

Louisiana Department of Environmental Quality
Office of Environmental Services
P.O. Box 4313
Baton Rouge, LA 70821-4313
Attn: Permits Division

H. Maintenance and Surveillance Fees

The Contractor, without additional expense to the Government, shall be responsible for paying any state required annual maintenance and surveillance fee for work associated with coverage under Permit No. LAR100000.

I. Control Measures

Control measures that will be implemented shall be in compliance with Permit No. LAR100000, and identified in the SWPPP. The control measures shall include both short and long term erosion control measures (BMP's) both vegetative and structural.

J. Maintenance and Inspection

The Contractor shall maintain the temporary and permanent vegetation, erosion and sediment control measures, and other protective measures in good and effective operating condition. The Contractor shall inspect disturbed areas of the construction site, areas used for storage of materials, stabilization practices, structural practices, and other controls at least once every fourteen (14) calendar days, before anticipated storm events expected to cause a significant amount of runoff, and within 24 hours of the end of any storm that produces 0.5 inches or more of precipitation.

A report of each inspection shall be made and included with the daily QC report. Any items identified in the inspection requiring repairs or restoration shall be immediately corrected and actions taken reported in the daily QC report. A copy of the daily report shall be provided to the COTR within 1 day of creation.

K. Notice of Termination (NOT)

Upon stabilization and elimination of all storm water discharges authorized by Permit No. LAR100000, a Notice of Termination (NOT) shall be certified and submitted by the Contractor to the Permits Division of LDEQ. Certified mail is recommended as proof of the NOT submittal. A copy of the Contractor's NOT submittal shall be provided to the Contracting Officer at the time of submittal, prior to final acceptance of the work.

(3) All paints and hazardous materials shall be kept in the original containers and tightly sealed with the manufacturer's label attached. These must be properly stored when not in use. They shall also be stored in a neat orderly manner in their original containers. Disposal of surplus materials shall be in accordance with the manufacturers' or State and Local regulations and recommended methods. Containers shall be empty before disposal.

(4) Petroleum products such as fuels and lubricants will be stored in tightly sealed containers that are clearly labeled. The storage and dispensing of all petroleum products will be in accordance with part 1926.152 of the OSHA Construction Industry Safety and Health Standards. All spills will be cleaned up on the same workday of the spill occurrence or whenever discovered.

(5) Soils contaminated with petroleum products will be removed from the site and disposed of in accordance with State and Local regulations. Clean soils will be placed as necessary in the areas where contaminated soils were removed to return the area to the pre-spill condition. All the disturbed area will be fertilized and seeded as required in Construction Specification 6.

(6) All on-site vehicles and equipment shall be monitored for leaks and receive regular preventive maintenance to reduce the chance for leakage. Leaks shall be repaired as soon as they are identified.

(7) Sumps used to control chemical pollution shall be sealed with plastic sheets having a minimum thickness of 20 mils.

(8) The Contractor shall anchor all temporary materials used for pollution control in such a manner to prevent its being transported off the worksite by storm runoff water. Damages caused by clogging of downstream bridges and/or culverts by such temporary materials being transported downstream by storm water shall be the responsibility of the Contractor. Damages shall be repaired by the Contractor at his/her expense by restoring or replacing damaged areas to pre-damage conditions. All temporary materials transported into the drainage system shall be removed and disposed of off-site.

(9) No separate payment will be made for Pollution Control. Compensation for this subsidiary item shall be included in the payment for Bid Item 1, Channel Excavation, Sediment Removal.

DRAFT

STORM WATER POLLUTION PREVENTION PLAN

DSR 071-05-004K
Gannon Canal

DATE

TABLE OF CONTENTS

1.0 SITE OWNER 3

1.1 SWPPP COORDINATOR AND DUTIES 3

2.1 SITE LOCATION 3

2.2 CONSTRUCTION TYPE 3

2.3 EXISTING CONDITIONS 4

2.4 CONSTRUCTION SEQUENCE 4

3.0 ENDANGERED OR THREATENED SPECIES 4

4.0 POTENTIAL CONTAMINANTS 4

5.0 CONTROLS TO REDUCE POLLUTANTS 6

6.0 CERTIFICATION OF COMPLIANCE WITH REGULATIONS 6

7.0 MAINTENANCE AND INSPECTION PROCEDURES 6

8.0 CERTIFICATION 8

8.1 SUBCONTRACTOR CERTIFICATION 9

1.0 SITE OWNER

Owner's Name and Address: (Permanent)

Sewerage & Water Board of New Orleans
625 St. Joseph Street
New Orleans, LA 70165
504-529-2837

Owner's Name and Address: (During Construction)

USDA Natural Resources Conservation Service
3737 Government St.
Alexandria, LA 71302

1.1 SWPPP COORDINATOR AND DUTIES

The construction site SWPPP coordinator for the DSR 071-05-004K – Gannon Canal Sediment and Debris Removal Project is (Contractor inserts appropriate persons name, title, contact no., etc.). Mr. / Ms._____ duties include the following:

- Implement the SWPPP
- Oversee installation of control measures
- Conduct inspections of control measures
- Identify deficiencies in the SWPPP or control measures and take corrective action

2.1 SITE LOCATION

The project site is located in Orleans Parish. The site is an existing earthen channel within the levee system located between Morrison Road and Lake Forest Boulevard that has been obstructed with sediment and debris as a result of Hurricane Katrina and is located in Sections 25 and 36 (of R12E) and 31 (of R13E), Township 11S, Range 12E and 13E with an additional small segment located in Section 6, Township 12S, Range 13E. The approximate coordinates of the site are:

Latitude 30.057917089 and Longitude -89.955005618 (@ Station 0-24)
Latitude 30.042491915 and Longitude -89.941932174 (@ Station 69+50)

The location map and site plan within the construction plans will act as the site map.

2.2 CONSTRUCTION TYPE

The construction will consist of removal and disposal of storm deposited sediment and debris from within the channel, excavation of storm deposited sediment and debris in the channel and placement and shaping of resulting spoil on existing top bank and slopes. When the capacity of the site to receive spoil material has been reached, excess spoil shall be hauled off-site to an approved disposal site. All bare areas caused by the construction operations will be seeded to permanent vegetation.

The total area estimated to be impacted by the construction activities including canal area is 18 acres.

2.3 EXISTING CONDITIONS

The area in which construction will take place is an existing earthen channel that has been obstructed with hurricane deposited debris and sediment.

The receiving water for any runoff from this project site is the Morrison Canal which is pumped via the Jahncke Canal and Pump Station into Lake Pontchartrain.

The NRCS Runoff Curve Number for the construction site prior to construction is estimated at 84 for fully developed urban areas with open spaces and grass cover on a hydrologic group D soil in fair condition. After construction the RCN is estimated to be 80 for open space and good condition grass cover on hydrologic group D soils.

2.4 CONSTRUCTION SEQUENCE

The proposed construction activities will be in the following sequence with the estimated quantities for each item:

ITEM	QUANTITY	UNIT
Excavation of sediment & placement and shaping of spoil	18	Acres
Seed and fertilize entire disturbed area	8	Acres

3.0 ENDANGERED OR THREATENED SPECIES

The proposed construction activities are in the parish where 3 known and 2 possible endangered or threatened species have been listed. A specific list of the species is available upon request.

This project is a result of the damages to the watershed caused by Hurricane Katrina. The Emergency Watershed Protection Program (EWP) administered by the Natural Resources Conservation Service (NRCS) is the program under which the construction activities within this SWPPP will occur to return the project area to pre hurricane conditions. A nationwide programmatic EIS has been performed for the EWP Program. An on-site environmental evaluation was made of this site by NRCS during the development of the Damage Survey Report (DSR). The environmental assessment in the DSR documents no threatened or endangered species were observed on-site, and by implementation of this construction project the long term impacts to listed species will be improved over the existing storm damaged conditions. Adverse impacts to threatened and endangered species are considered not likely.

4.0 POTENTIAL CONTAMINANTS

The following list of materials or substances are expected to be present during construction which could impact water or air quality if improperly used.

Petroleum Based Products
Sediment
Fertilizers

The Contractor will be responsible for spill prevention and cleanup. The Contractor will submit an emergency response plan to the Contracting Officer prior to the start of work on

this contract. The Contractor's emergency response plan will be clearly posted on-site and site personnel will be made aware of the procedures and the location of the information and cleanup supplies.

The following are the Material Management Practices that will be used to reduce the risk of spills or other accidental exposure of materials and substances to storm runoff water:

An effort will be made to store only enough products required to do the job. All materials stored on-site will be stored in a neat, orderly manner in their appropriate containers and, if possible under a roof or other enclosure. Products will be kept in their original containers with the manufacturers' label. Manufacturers' recommendations for proper use and disposal will be followed. Containers of products will be empty before disposal.

The following additional Practices will be used to reduce the risks associated with hazardous materials:

Hazardous products will be kept in original containers unless containers cannot be resealed. Original labels and materials safety data will be retained. Surplus products and containers will be properly disposed of in accordance with manufacturers' or State and local regulations and recommended methods. Containers will be empty before disposal.

Petroleum Products:

All on-site vehicles will be monitored for leaks and receive regular preventive maintenance to reduce the chance of leakage. Petroleum products will be stored in tightly sealed containers, which are clearly labeled. Any asphalt substances used on-site will be applied according to manufacturer's recommendations.

All spills of petroleum products will be cleaned up immediately. All contaminated soils will be removed from the site and disposed of in accordance with State and local regulations. Clean soils will be placed as necessary in the areas where contaminated soils were removed to return the area to the pre-spill condition. All disturbed area will be fertilized and seeded as required in Construction Specification 6.

Fertilizers:

Fertilizers will be applied in the amount and at the rate recommended in the project specifications. These rates shall not exceed the manufacturers' recommendation. Storage will be in a covered shed. The contents of any partially used bags of fertilizer will be transferred to an acceptable sealable plastic container to avoid spills.

Spill Control Practices - The following additional practices will be followed for spill prevention and cleanup:

Manufacturers' recommended methods for spill cleanup will be clearly posted and site personnel will be made aware of the procedures and the location of the information and cleanup supplies. Materials and equipment necessary for spill cleanup will be available on-site.

All spills of hazardous materials will be cleaned up immediately after discovery. Spills of toxic or hazardous materials will be reported to the appropriate State and local government agency. The Contractor will be responsible for spill prevention and cleanup.

5.0 CONTROLS TO REDUCE POLLUTANTS

The Contractor will be required to prepare a written plan for pollution control at the project site. The plan will outline construction sequences and construction activities so that the least area possible is disturbed by the various construction activities in the course of the construction of the project. It will contain management provisions for storm water POLLUTION control.

It is the responsibility of the Contractor to develop a **Site Specific Storm Water Pollution Prevention Plan** around his proposed construction operations. The following Erosion and Sediment Control plan is offered for consideration by the Contractor in the development of his plan for the construction of the embankment and installation of the structures. The Contractor is reminded that **this is a draft plan only** and is not intended to dictate a construction sequence or any construction activities.

Temporary Erosion and Sediment Controls:

- Sediment fences and or hay bale barriers shall be installed as necessary at concentrated flow areas where spoil is placed in order to maintain spoil at the location of placement.
- Upon completion of shaping of resulting spoil, all bare areas will be fertilized and seeded in accordance with Specification 6 of the construction contract.

Waste Disposal

- All non vegetative debris removed from the site shall be disposed of in an approved off-site facility.
- All chemical, hazardous and sanitary waste materials will be disposed of in an approved off-site disposal area. Chemical waste shall be temporarily stored in leak proof containers until disposed of in an approved area.
- Accidental chemical spills will be properly cleaned up on the same day of occurrence. Daily inspection will be made to determine needed cleanup.

6.0 CERTIFICATION OF COMPLIANCE WITH REGULATIONS

All local and state regulations will be adhered to concerning the burning of organic materials or disposal of organic, chemical, and sanitary waste. This project has been authorized by the Department of the Army in accordance with Section 404 of the Clean Water Act (CWA). The State of Louisiana, Department of Environmental Quality, has issued a Water Quality Certification permit. There are no other applicable State or Federal requirements for sediment and erosion site plans or storm water management site plans.

7.0 MAINTENANCE AND INSPECTION PROCEDURES

The Contractor will be responsible for intermittent review and inspection of the operation and maintenance of all pollution control measures throughout the life of the contract. Visual inspections of all cleared and graded areas of the construction site will be performed daily. Also inspection of the conditions and the need for repair shall be made after each storm rainfall exceeding 0.5 inch. Daily inspections of the need for clean up of chemical spills and sanitary facilities are specified.

The inspections will verify that the procedures used to prevent storm water contamination from construction materials are effective. Any items requiring maintenance will be immediately addressed.

8.0 CERTIFICATION

I certify under penalty of law that this document and all attachments were prepared under my direction or supervision in accordance with a system design to assure that qualified personnel properly gathered and evaluated the information submitted. Based on my inquiry of the person or persons who manages the system, or those persons directly responsible for gathering the information, the information submitted is, to the best of my knowledge and belief, true, accurate, and complete. I am aware that there are significant penalties for submitting false information, including the possibility of fine and imprisonment for knowing violations.

Signature: _____ Date: _____

Name: _____

Title: _____

Firm: _____

Address: _____

_____

_____

Phone: _____

8.1 SUBCONTRACTOR CERTIFICATION

I certify under penalty of law that I understand the terms and conditions of the general Louisiana Pollution Discharge Elimination Systems (LPDES) permit that authorizes the storm water discharges associated with industrial activity from the construction site identified as part of this certification.

Signature: _____ Date: _____

Name: _____

Title: _____

Firm: _____

Address: _____

_____

_____

Phone: _____

Signature: _____ Date: _____

Name: _____

Title: _____

Firm: _____

Address: _____

_____

_____

Phone: _____

To: **Prospective Applicants for a Stormwater General Permit Associated with Construction Activity Greater than 5 Acres**

Attached is a **Stormwater General Permit Associated with Construction Activity Greater than 5 Acres Notice of Intent (NOI) CSW-G,** for a Louisiana Pollutant Discharge Elimination System (LPDES) permit, authorized under EPA's delegated NPDES program under the Clean Water Act. To be considered complete, every item on the form must be addressed and the last page signed by an authorized company agent.

Three copies (one original and two copies) of your **completed NOI** should be submitted to:

Department of Environmental Quality
Office of Environmental Services
Post Office Box 4313
Baton Rouge, LA 70821-4313
Attention: Permits Division

Please be advised that completion of this NOI may not fulfill all state, federal, or local requirements for facilities of this size and type.

According to L. R. S. 48:385, any discharge to a state highway ditch, cross ditch, or right-of-way shall require approval from:

Louisiana DOTD Office of Highways Post Office Box 94245 Baton Rouge, LA 70804-9245 (225) 379-1301	AND	Louisiana DHH Office of Public Health 6867 Bluebonnet Road, Box 7 Baton Rouge, LA 70810 (225) 765-5044

A copy of the LPDES regulations may be obtained from the Department's website at http://www.deq.state.la.us/planning/regs/index.htm or by contacting the Office of Environmental Assessment, Regulations Development Section, Post Office Box 4314, Baton Rouge, Louisiana 70821-4314, phone (225) 219-3550.

After the review of the NOI, this Office will issue written notification to those applicants who are accepted for coverage under this general permit.

For questions regarding this NOI please contact the Water & Waste Permits Division at (225) 219-3181. For help regarding completion of this NOI please contact DEQ, Small Business Assistance at 1-800-259-2890.

STATE OF LOUISIANA
DEPARTMENT OF ENVIRONMENTAL QUALITY

Office of Environmental Services, Permits Division
Post Office Box 4313
Baton Rouge, LA 70821-4313
PHONE#: (225) 219-3181

LPDES NOTICE OF INTENT (NOI) TO DISCHARGE STORMWATER ASSOCIATED WITH CONSTRUCTION ACTIVITY GREATER THAN 5 ACRES
(Attach additional pages if needed.)

Submission of this Notice of Intent constitutes notice that the party identified in Section I of this form intends to be authorized by an LPDES permit issued for stormwater discharges associated with construction activity in Louisiana. Submission of this Notice of Intent also constitutes that implementation of the Storm Water Pollution Prevention Plan required under the general permit will begin at the time the permittee commences work on the construction project identified in Section II below.

SECTION I - FACILITY INFORMATION

A. Permit is to be issued to the following: (must be a party having operational control over construction plans and specifications and /or a party having day-to-day operational control over those activities at a project site which are necessary to ensure compliance with the storm water pollution prevention plan or other permit conditions LAC 33:IX.2501.B and LAC 33:IX.2503.A and B).

1. Legal Name of Applicant
(Company, Partnership, Corporation, etc.) _____

Facility Name _____

Mailing Address _____

_____ Zip Code: _____

If applicant named above is not also the owner, state owner name, phone # and address.

_____

_____

Please check status: ☐ Federal ☐ Parish ☐ Municipal ☐ State ☐ Public ☐ Private ☐ Other: _____

2. Location of facility. Please provide a specific address, street, road, highway, interstate, and/or River Mile/Bank location of the facility for which the NOI is being submitted.

_____

City _____ Zip Code_____ Parish_____

Front Gate Coordinates:

Latitude- _____deg. _____min. _____sec. Longitude- _____deg. _____ min. _____sec.

Method of Coordinate Determination: _____
(Quad Map, Previous Permit, website, GPS)

Is the facility located on Indian Lands? ☐ Yes ☐ No

SECTION I – FACILITY INFORMATION (cont.)

A. Stormwater Pollution Prevention Plan Information.

1. Has the Stormwater Pollution Prevention Plan (SWPP) been prepared? (Do not submit SWPP with this NOI)
   ☐ Yes ☐ No
2. Indicate address of location of SWPPP if different from Project Location.

   Address _____

   City _____ State _____ Zip _____

B. Location Information

1. Estimated Construction Start Date: (mo/day/yr) _____
2. Estimated Construction Completion Date: (mo/day/yr) _____
3. Estimate of area to be disturbed (to nearest acre) _____
4. Is the project part of a larger development or subdivision? ☐ Yes ☐ No

   If yes, provide the name of the development or subdivision. _____

C. Discharge Information

1. If the discharge from the facility first enters a Municipal Separate Storm Sewer System (MS4), provide the name of the MS4.

   _____

2. Name of receiving Waterbody _____
3. Estimate of Likelihood of Discharge: (choose only one)
   ☐ Unlikely ☐ Once per month ☐ Once per week ☐ Once per day ☐ Continual
4. Based on the attached Endangered Species Guidance are there any listed endangered or threatened species in the project area?
   ☐ Yes ☐ No
5. Based on the attached Historic Properties Guidance, are any historic properties listed or eligible for listing on the National Register of Historic Places located on the facility or in proximity to the discharge?
   ☐ Yes ☐ No
6. Was the State Historic Preservation Office (see Part I.A.3.f of the permit) involved in your determination of eligibility?
   ☐ Yes ☐ No

SECTION II – LAC 33.I.1701 REQUIREMENTS

A. Does the company or owner have federal or state environmental permits identical to, or of a similar nature to, the permit for which you are applying in other states? (This requirement applies to all individuals, partnerships, corporations, or other entities who own a controlling interest of 50% or more in your company, or who participate in the environmental management of the facility for an entity applying for the permit or an ownership interest in the permit.)

☐ Permits in other states (list states): _____

☐ No other environmental permits.

B. Do you owe any outstanding fees or final penalties to the Department? ☐ Yes ☐ No

If yes, please explain.

_____

C. Is your company a corporation or limited liability company? ☐ Yes ☐ No

If yes, is the corporation or LLC registered with the Secretary of State? ☐ Yes ☐ No

CERTIFICATION

I certify under penalty of law that this document and all attachments were prepared under my direction or supervision in accordance with a system designed to assure that qualified personnel properly gathered and evaluated the information submitted. Based on my inquiry of the person or persons who manage this system, or those persons directly responsible for gathering the information, the information submitted is, to the best of my knowledge and belief, true, accurate, and complete. I also certify that a storm water pollution prevention plan, including both construction and post construction controls, has been prepared for the site in accordance with the permit and that such plan complies with approved State, Tribal and/or local sediment and erosion plans or permits and/or storm water management plans or permits. I am aware that signature and submittal of the NOI is deemed to constitute my determination of eligibility under one or more of the requirements of Permit Part I.A.3.e(1), related to the Endangered Species Act requirements. To the best of my knowledge, I further certify that such discharges and discharge related activities will not have an effect on properties listed or eligible for listing on the National Register of Historic Places under the National Historic Preservation Act, or are otherwise eligible for coverage under Part I.A.3.f of the permit. I am also aware that there are significant penalties for submitting false information, including the possibility of fine and imprisonment for knowing violations.

Signature _____

Printed Name _____

Title _____

Company _____

Date _____

Telephone _____

ENDANGERED SPECIES GUIDANCE

I. INSTRUCTIONS

Below is a list of endangered and threatened species that EPA has determined may be affected by the activities covered by the large construction general permit (LCGP). These species are listed by parish. In order to get LCGP coverage, applicants must:

- Determine whether any species listed in this Guidance or critical habitat are in proximity to the facility,

- Certify pursuant to Section I.A.3.e follow the procedures found in this Guidance to protect listed endangered and threatened species and designated critical habitat and that the stormwater discharges and BMPs to control stormwater run off covered under this permit meet one or more of the eligibility requirements of Part I.A.3.e.(1) of this permit. Signature and submittal of this Notice of Intent is deemed to constitute the Operator's compliance with eligibility requirements for permit coverage.

To determine permit eligibility and to avoid unauthorized impacts upon threatened or endangered species or on the critical habitat for those species, follow steps 1 through 4, and 5 if applicable when completing the Notice of Intent and in development of the pollution prevention plan.

STEP 1: DETERMINE IF THE CONSTRUCTION SITE OR ASSOCIATED STORMWATER DISCHARGE(S) IS FOUND WITHIN THE VICINITY OF FEDERALLY LISTED THREATENED OR ENDANGERED SPECIES, OR THEIR DESIGNATED CRITICAL HABITAT.

Candidates for coverage under General Permit LAR100000 should contact the U.S. Fish and Wildlife Service and the National Marine Fisheries Service in writing for information regarding Federally listed threatened or endangered species, or their critical habitat. That request should include a description of the facility and a topographic map depicting the locations of the facility, the proposed construction activities, and the associated storm water discharges.

Fish and Wildlife Service 646 Cajundome Blvd. Suite 400 Lafayette, LA 70506 (337) 291-3124	National Marine Fisheries Service Southeast Regional Office 9721 Executive Center Drive North St. Petersburg, FL 33702 (727) 570-5301

If the proposed site is in proximity to any listed species or their proposed habitat, the applicant should proceed to **Step 2** below. If, however, the proposed site is not located in proximity to any federally listed species or their critical habitat, then the applicant should proceed directly to **Step 5.**

(EPA notes that many measures imposed to protect listed species under steps 3 through 4 will also protect critical habitat. However, obligations to ensure that an action is not likely to result in the destruction or adverse modification of critical habitat are separate from those of ensuring that an action is not likely to jeopardize the existence of threatened and endangered species. Thus, meeting the eligibility requirements of this permit may require measures to protect critical habitat that are separate and distinct from those to protect listed species.).

STEP 2: DETERMINE IF ANY SPECIES MAY BE FOUND "IN PROXIMITY" TO THE CONSTRUCTION ACTIVITY'S STORM WATER DISCHARGES:

A species is in proximity to a construction activity's storm water discharge when the species is:

- Located in the path or immediate area through which or over which contaminated point source storm water flows from construction activities to the point of discharge into the receiving water.

- Located in the immediate vicinity of, or nearby, the point of discharge into receiving waters.

- Located in the area of a site where storm water BMPs are planned or are to be constructed.

The area in proximity to be searched/surveyed for listed species will vary with the size and structure of the construction activity, the nature and quantity of the storm water discharges, and the type of receiving waters. Given the number of construction activities potentially covered by the LCGP, no specific method to determine whether species are in proximity is required for permit coverage under the LCGP. Instead, operators should use the method or methods which best allow them to determine to the best of their knowledge whether species are in proximity to their particular construction activities. These methods may include:

- Conducting visual inspections: This method may be particularly suitable for construction sites that are smaller in size or located in non-natural settings such as highly urbanized areas or industrial parks where there is little or no natural habitat, or for construction activities that discharge directly into municipal storm water collection systems.

- Contacting the nearest State or Tribal Wildlife Agency or U.S. Fish and Wildlife Service (FWS) or National Marine Fisheries Service (NMFS) offices. Many endangered and threatened species are found in well-defined areas or habitats. That information is frequently known to State, Tribal, or Federal wildlife agencies.

- Contacting local/regional conservation groups. These groups inventory species and their locations and maintain lists of sightings and habitats.

- Conducting a formal biological survey. Larger construction sites with extensive storm water discharges may choose to conduct biological surveys as the most effective way to assess whether species are located in proximity and whether there are likely adverse effects.

- Conducting an Environmental Assessment Under the National Environmental Policy Act (NEPA). Some construction activities may require environmental assessments under NEPA. Such assessments may indicate if listed species are in proximity. (LCGP coverage does not trigger NEPA because it does not regulate any dischargers subject to New Source Performance Standards under Section 306 of the Clean Water Act. See CWA. 511(c). However, some construction activities might require review under NEPA because of Federal funding or other Federal nexus.)

If no species are in proximity, an operator is eligible for LCGP coverage under Part I.A.3.E.(1)(a) of the permit.

If listed species are found in proximity to a facility, operators must indicate the location and nature of this presence in the storm water pollution prevention plan and follow step 3 below.

STEP 3: DETERMINE IF SPECIES OR CRITICAL HABITAT COULD BE ADVERSELY AFFECTED BY THE CONSTRUCTION ACTIVITY'S STORM WATER DISCHARGES OR BY BMPs TO CONTROL THOSE DISCHARGES.

Scope of Adverse Effects: Potential adverse effects from storm water include:

- Hydrological. Storm water may cause siltation, sedimentation or induce other changes in the receiving waters such as temperature, salinity, or pH. These effects will vary with the amount of storm water discharged and the volume and condition of the receiving water. Where a storm water discharge constitutes a minute portion of the total volume of the receiving water, adverse hydrological effects are less likely.

- Habitat. Storm water may drain or inundate listed species habitat.

- Toxicity. In some cases, pollutants in storm water may have toxic effects on listed species.

The scope of effects to consider will vary with each site. Operators must also consider the likelihood of adverse effects on species from any BMPs to control storm water. Most adverse impacts from BMPs are likely to occur from the construction activities. However, it is possible that the operation of some BMPs (for example, larger storm water retention ponds) may affect endangered and threatened species.

If adverse effects are determined to be not likely, then the operator is eligible for LCGP coverage under Part I.A.3.e(1)(a) of the permit.

If adverse effects are likely, operators should follow step 4 below.

STEP 4: DETERMINE IF MEASURES CAN BE IMPLEMENTED TO AVOID ANY ADVERSE EFFECTS:

If an operator determines that adverse effects are likely, it can receive coverage if appropriate measures are undertaken to avoid or eliminate any actual or potential adverse affects prior to applying for permit coverage. These measures may involve relatively simple changes to construction activities such as re-routing a storm water discharge to bypass an area where species are located, relocating BMPs, or limiting the size of construction activity that will be subject to storm water discharge controls.

At this stage, operators may wish to contact the FWS and/or NMFS to see what appropriate measures might be suitable to avoid or eliminate adverse impacts to listed species and/or critical habitat. (See 50 CFR 402.13(b)). This can entail the initiation of informal consultation with the FWS and/or NMFS which is described in more detail below at step 5.

If operators adopt measures to avoid or eliminate adverse affects, they must continue to abide by them during the course of permit coverage. These measures must be described in the storm water pollution prevention plan and may be enforceable as permit conditions.

If appropriate measures to avoid the likelihood of adverse effects are not available to the operator, the operator should follow step 5 below.

STEP 5: DETERMINE IF THE ELIGIBILITY REQUIREMENTS OF PART I.A.3.E.(1)(b)-(e) CAN BE MET.

Where adverse effects are likely, the operator must contact the EPA and FWS/NMFS. Operators may still be eligible for LCGP coverage if any likelihood of adverse effects are addressed through meeting the criteria of Part I.A.3.e.(1)(b)-(e) of the permit if:

- I.A.3.e.(1)(b). The operator's activity has received previous authorization through an earlier Section 7 consultation or issuance of a Endangered Species Act (ESA) Section 10 permit (incidental taking permit) and that authorization addressed storm water discharges and/or BMPs to control storm water runoff (e.g., developer included impact of entire project in consultation over a wetlands dredge and fill permit under Section 7 of the ESA).

- I.A.3.e.(1)(c). The operator's activity was considered as part of a larger, more comprehensive assessment of impacts on endangered and threatened species and /or critical habitat under Section 7 or Section 10 of the Endangered Species Act that which accounts for storm water discharges and BMPs to control storm water runoff (e.g., where an area-wide habitat conservation plan and Section 10 permit is issued which addresses impacts from construction
- activities including those from storm water or a NEPA review is conducted which incorporates ESA Section 7 procedures).

- I.A.3.e.(1)(d). Enter Section 7 consultation with the FWS and/or NMFS for the operator's storm water discharges and BMPs to control storm water runoff.

  In such cases, EPA automatically designates the operator as a non-federal representative. *See* I.A.3.e.(4). When conducting Section 7 consultation as a non-federal representative, operators should follow the procedures found in 50 CFR 402 the ESA regulations. Operators must also notify EPA and the appropriate FWS/NMFS office of its intention to conduct consultation as a non-federal representative.

  Coverage by the LCGP is permissible under Part I.A.3.e.(1)(b) if the consultation results in either: 1) FWS/NMFS written concurrence with a finding of no likelihood of adverse effects (*see* 50 CFR 402.13) or 2) issuance of a biological opinion in which FWS and/or NMFS finds that the action is not likely to jeopardize the continued existence of listed endangered or threatened species or result in the adverse modification or destruction of adverse habitat (see 50 CFR 403.14(h)).

  Any terms and conditions developed through consultations to protect listed species and critical habitat must be incorporated into the pollution prevention plan. As noted above, operators may, if they wish, initiate consultation during Step 4 above (upon becoming aware that endangered and threatened species are in proximity to the facility).

- I.A.3.e.(1)(e). The operator's activity was considered as part of a larger, more comprehensive site-specific assessment of impacts on endangered and threatened species by the owner or other operator of the site when it developed a SWPPP and that permittee met the eligibility requirements stated in items I.A.3.e.(1)(a), (b), (c), or (d) of the permit (e.g., owner was able to determine there would be no adverse impacts for the project as a whole under item (a), so contractor meets the eligibility requirements stated in item (e)). Utility companies applying for area-wide permit coverage meet the eligibility requirements stated in item (e) since authorization to discharge is contingent on a principal operator of a construction project having been granted coverage under this, or an alternative LPDES permit for the areas of the site where utilities installation activities will occur.

  The determination of eligibility under the conditions of permit Parts I.A.3.e.(1)(b)-(e) shall be documented in the facility's SWPPP and copies of all applicable documents, such as FWS approval letters, included in the SWPPP.

The operator must comply with any terms and conditions imposed under the eligibility requirements of permit Parts I.A.3.e.(1)(a), (b), (c), (d), (e) to ensure that storm water discharges or BMPs to control storm water runoff are protective of listed endangered and threatened species and/or critical habitat. Such terms and conditions must be incorporated in the operator's storm water pollution prevention plan.

If the eligibility requirements of Part I.A.3.e.(1)(a)-(e) cannot be met then the operator may not receive coverage under this permit. Operators should then consider applying to LDEQ for an individual permit.

This permit does not authorize any "taking" (as defined under Section 9 of the Endangered Species Act) of endangered or threatened species unless such takes are authorized under Sections 7 or 10 the Endangered Species Act. Operators who believe their construction activities may

result in takes of listed endangered and threatened species should be sure to get the necessary coverage for such takes through an individual consultation or Section 10 permit.

This permit does not authorize any storm water discharges or BMPs to control storm water runoff that are likely to jeopardize the continued existence of any species that are listed as endangered or threatened under the Endangered Species Act or result in the adverse modification or destruction of designated critical habitat.

II. ENDANGERED SPECIES PARISH LIST

http://www.deq.state.la.us/permits/lpdes/species.pdf

HISTORIC PROPERTIES GUIDANCE

Applicants must determine whether their facility's storm water discharge has the potential to affect a property that is either listed or eligible for listing on the National Register of Historic Places.

For existing dischargers who do not need to construct BMPs for permit coverage, a simple visual inspection may be sufficient to determine whether historic properties are affected. However, for facilities which are new stormwater dischargers, applicants should conduct further inquiry to determine whether historic properties may be affected by the stormwater discharge or BMPs to control the discharge. In such instances, applicants should first determine whether there are any historic properties or places listed on the National Register or if any are eligible for listing on the register (e.g., they are "eligible for listing").

Due to the large number of entities seeking coverage under this permit and the limited number of personnel available to the State Historic Preservation Officer to respond to inquiries concerning the location of historic properties, it is suggested that applicants first access the "National Register of Historic Places" information listed on the Louisiana Office of Cultural Development's web page at the address listed below. The address for the Louisiana State Historic Preservation Officer is also listed below. Applicants may also contact city, parish or other local historical societies for assistance, especially when determining if a place or property is eligible for listing on the register.

The following scenarios describe how applicants can meet the permit eligibility criteria for protection of historic properties under this permit:

(1) If historic properties are **not identified** in the path of a facility's storm water discharge or where construction activities are planned to install BMPs to control such discharges (e.g., diversion channels or retention ponds), or

    if historic properties **are identified** but it is determined that they will **not be affected** by the discharge or construction of BMPs to control the discharge

    then the applicant has met the permit eligibility criteria under Part I.A.3.f.

(2) If historic properties **are identified** in the path of a facility's storm water discharge or where construction activities are planned to install BMPs to control such discharges, and it is determined that **there is the potential** to adversely affect the property, the applicant can still meet the permit eligibility criteria if he/she obtains and complies with a written agreement with the State Historic Preservation Officer which outlines measures the applicant will follow to mitigate or prevent those adverse effects. The contents of such a written agreement must be included in the facility's storm water pollution prevention plan.

In situations where an agreement cannot be reached between an applicant and the State Historic Preservation Officer, applicants should contact the Advisory Council on Historic Preservation listed below in this addendum for assistance.

The term "adverse effects" includes but is not limited to damage, deterioration, alteration or destruction of the historic property or place. LDEQ encourages applicants to contact the Louisiana State Historic Preservation Officer as soon as possible in the event of a potential adverse effect to a historic property.

Applicants are reminded that they must comply with all applicable State and local laws concerning the protection of historic properties and places.

I. Internet Information on the National Register of Historic Places

An electronic listing of the "National Register of Historic Places," as maintained by the Louisiana Office of Cultural Development, Division of Historic Preservation, can be accessed on the Internet at "http://www.crt.state.la.us/nhl2/default.htm". Remember to use small case letters when accessing Internet addresses.

II. Louisiana State Historic Preservation Officer (SHPO)

Louisiana, SHPO, Office of Cultural Development, P.O. Box 44247, Baton Rouge, LA 70804-4247. For questions contact the Section 106 Review Coordinator, Telephone: (225) 342-8170.

III. Advisory Council on Historic Preservation

Advisory Council on Historic Preservation, 12136 W. Bayaud Ave., Suite 330, Lakewood, CO 80228, Telephone (303) 969-5110, Fax: (303) 969-5115, Email: achp@achp.gov

STATE OF LOUISIANA
DEPARTMENT OF ENVIRONMENTAL QUALITY

Office of Environmental Services, Permits Division
Post Office Box 4313
Baton Rouge, LA 70821-4313
Phone#: (225) 219-3181

LPDES NOTICE OF TERMINATION (NOT) OF COVERAGE UNDER LPDES GENERAL PERMIT FOR STORMWATER DISCHARGES ASSOCIATED WITH CONSTRUCTION ACTIVITY GREATER THAN 5 ACRES

SECTION I –PERMIT INFORMATION

Facility's Storm Water General Permit Authorization Number LAR10 ___ ___ ___ ___

Check here if you are no longer the Operator of the Facility ☐

Check here if the Storm water discharge associated with the construction activity is Being Terminated ☐

SECTION II – FACILITY OPERATOR INFORMATION

Name _____

Address _____

City _____

State _____ Zip _____ Phone _____

SECTION III – FACILITY/SITE LOCATION INFORMATION

Name of Project _____

Location of Project _____

City _____ State _____ Zip _____

Latitude-_____deg. _____min. _____sec. Longitude-_____deg. _____ min. _____sec.

Parish _____

SECTION IV – CERTIFICATION

I certify under penalty of law that all storm water discharges associated with construction activity from the identified facility that are authorized by a LPDES general permit have been eliminated or that I am no longer the operator of the facility or construction site. I understand that by submitting this Notice of Termination, I am no longer authorized to discharge storm water associated with industrial activity under this general permit, and that discharging pollutants in storm water associated with industrial activity to waters of the State is unlawful under the Clean Water Act where the discharge is not authorized by a LPDES permit. I also understand that the submittal of this Notice of Termination does not release an Operator from liability for any violation of this permit or the Clean Water Act.

Print Name _____ Date _____

Signature _____

Construction Specification 6—Seeding, Sprigging, and Mulching

1. Scope

The work consists of preparing the area for treatment; furnishing and placing seed, sprigs, mulch, fertilizer, inoculant, lime, and other soil amendments; and anchoring mulch in designated areas as specified.

2. Material

Seed—All seed shall conform to the current rules and regulations of the state where it is being used and shall be from the latest crop available. It shall meet or exceed the standard for purity and germination listed in section 7.

Seed shall be labeled in accordance with the state laws and the U.S. Department of Agriculture rules and regulations under the Federal Seed Act in effect on the date of invitations for bids. Bag tag figures are evidence of purity and germination. No seed will be accepted with a test date of more than 9 months before the delivery date to the site.

Seed that has become wet, moldy, or otherwise damaged in transit or storage will not be accepted. The percent of noxious weed seed allowable shall be as defined in the current State laws relating to agricultural seeds. Each type of seed shall be delivered in separate sealed containers and fully tagged unless exception is granted in writing by the contracting officer.

Fertilizer—Unless otherwise specified, the fertilizer shall be a commercial grade fertilizer. It shall meet the standard for grade and quality specified by State law. Where fertilizer is furnished from bulk storage, the contractor shall furnish a supplier's certification of analysis and weight. When required by the contract, a representative sample of the fertilizer shall be furnished to the contracting officer for chemical analysis.

Inoculants—The inoculant for treating legume seeds shall be a pure culture of nitrogen-fixing bacteria prepared specifically for the species and shall not be used later than the date indicated on the container or as otherwise specified. A mixing medium, as recommended by the manufacturer, shall be used to bond the inoculant to the seed. Two times the amount of the inoculant recommended by the manufacturer shall be used except four times the amount shall be used when seed is applied using a hydraulic seeder. Seed shall be sown within 24 hours of treatment and shall not remain in the hydraulic seeder longer than 4 hours.

Lime and other soil amendments—Lime shall consist of standard ground agriculture limestone, or approved equivalent. Standard ground agriculture limestone is defined as ground limestone meeting current requirements of the State Department of Agriculture. Other soil amendments shall meet quality criteria and application requirements specified in section 7.

Mulch tackifiers—Asphalt emulsion tackifiers shall conform to the requirements of ASTM D 977, Specification for Emulsified Asphalt. The emulsified asphalt may be rapid setting, medium setting, or slow setting. Nonasphaltic tackifiers required because of environmental considerations shall be as specified in section 7.

Straw mulch material—Straw mulch shall consist of wheat, barley, oat or rye straw, hay, grass cut from native grasses, or other plants as specified in section 7. The mulch material shall be air-

dry, reasonably light in color, and shall not be musty, moldy, caked, or otherwise of low quality. The use of mulch that contains noxious weeds is not permitted. The contractor shall provide a method satisfactory to the contracting officer for determining weight of mulch furnished.

Other mulch materials—Mulching materials, such as wood cellulose fiber mulch, mulch tackifiers, synthetic fiber mulch, netting, and mesh, are other mulching materials that may be required for specialized locations and conditions. These materials, when specified, must be accompanied by the manufacturer's recommendations for methods of application.

3. Seeding mixtures, sod, sprigs, and dates of planting

The application rate per acre for seed mixtures, sprigs, or sod and date of seeding or planting shall be as shown on the plans or as specified in section 7.

4. Seedbed preparation and treatment

Areas to be treated shall be dressed to a smooth, firm surface. On sites where equipment can operate on slopes safely, the seedbed shall be adequately loosened (4 to 6 inches deep) and smoothed. Depending on soil and moisture conditions, disking or cultipacking, or both, may be necessary to properly prepare a seedbed. Where equipment cannot operate safely, the seedbed shall be prepared by hand methods by scarifying to provide a roughened soil surface so that broadcast seed will remain in place.

If seeding is to be accomplished immediately following construction operations, seedbed preparation may not be required except on a compacted, polished, or freshly cut soil surface.

Rocks larger than 6 inches in diameter, trash, weeds, and other debris that will interfere with seeding or maintenance operations shall be removed or disposed of as specified in section 7.

Seedbed preparation shall be discontinued when soil moisture conditions are not suitable for the preparation of a satisfactory seedbed as determined by the contracting officer's technical representative (COTR).

5. Seeding, sprigging, fertilizing, mulching, and stabilizing

All seeding or sprigging operations shall be performed in such a manner that the seed or sprigs are applied in the specified quantities uniformly in the designated areas. The method and rate of seed application shall be as specified in section 7. Unless otherwise specified, seeding or sprigging shall be accomplished within 2 days after final grading is completed and approved.

Fertilizer, lime, and other soil amendments shall be applied as specified in section 7. When specified, the fertilizer and soil amendments shall be thoroughly incorporated into the soil immediately following surface application.

The rate, amount, and kind of mulching or mesh shall be as specified in section 7. Mulches shall be applied uniformly to the designated areas. They shall be applied to areas seeded not later than 2 working days after seeding has been performed. Straw mulch material shall be stabilized within 24 hours of application using a mulch crimper or equivalent anchoring tool or by a suitable tackifier. When the mulch crimper or equivalent anchoring tool is used, it shall have straight blades and be the type manufactured expressly for and capable of firmly punching the mulch into the soil. Where the equipment can be safely operated, it shall be operated on the contour. Hand methods shall be used where equipment cannot safely operate to perform the work required.

The tackifier shall be applied uniformly over the mulch material at the specified rate, or it shall be injected into the mulch material as it is being applied. Mesh or netting stabilizing materials shall be applied smoothly, but loosely on the designated areas. The edges of these materials shall be buried or securely anchored using spikes or staples as specified in section 7.

The contractor shall maintain the mesh or netting areas until all work under the contract has been completed and accepted. Maintenance shall consist of the repair of areas damaged by water erosion, wind, fire, or other causes. Such areas shall be repaired to reestablish the intended condition and to the design lines and grades required by the contract. The areas shall be refertilized, reseeded, and remulched before the new application of the mesh or netting.

6. Measurement and payment

Method 1—For items of work for which specific unit prices are established in the contract, each area treated is measured as specified in section 7 and the area calculated to the nearest 0.1 acre. Payment for treatment is made at the contract unit price for the designated treatment, which will constitute full compensation for completion of the work.

When specified as an item of work, mesh or netting is measured to the nearest square yard of surface area covered and accepted. Payment is made at the contract unit price and will constitute full compensation for completion of the work.

Method 2—For items of work for which specific lump sum prices are established in the contract, the quantity of work will not be measured for payment. Payment for this item is made at the contract lump sum price for the item and will constitute full compensation for the completion of the work.

Method 3—For items of work for which lump sum prices are established in the contract, payment is made as the work proceeds. Progress payments will be determined as specified in section 7. Payment of the lump sum contract price will constitute full compensation for completion of the work.

All Methods—The following provisions apply to all methods of measurement and payment. Compensation for any item of work described in the contract, but not listed in the bid schedule is included in the payment for the item of work to which it is made subsidiary. Such items and the item(s) to which they are made subsidiary are identified in section 7.

7. Items of work and construction details

(See next sheet)

7. ITEMS OF WORK AND CONSTRUCTION DETAILS

Items of work to be performed in conformance with this specification and the construction details therefore are:

a) Subsidiary Item, Permanent Vegetation Seeding, Fertilization and Mulching

A. Permanent Vegetation Seeding

(1) This item will consist of furnishing and applying seed according to the following specifications:

(2) Seeding for permanent cover will be done on all bare areas such as channel slopes, berms, spoil placement areas, access routes and any other areas disturbed as a result of the debris and sediment removal. Fertilizer and seed will not be applied to areas with perennial ponded water.

(3) No seedbed preparation will be required if the construction equipment has produced a scarified surface and the seeding is done the day the areas to be seeded are worked. If the construction equipment has produced a slick surface, or seeding is not done the day the areas are worked, a seedbed will be prepared by scarifying the soil surface with a spike-tooth harrow or similar implement to a depth of one (1) inch. When more than one species of vegetation is required, each species shall be seeded separately. Permanent vegetation seeding will be applied at the following rates:

Seeding Period	**Species**	**Pure Live Seed (lb./ac)**
Mar 1 - Aug 31	Common Bermuda-grass (hulled)	45
Sep 1 - Dec 31	Tall Fescue	35
Jan 1 - Feb 28	Common Bermuda-grass(unhulled) and Common Bermuda-grass (hulled) and Rye Grass	20 20 25

B. Fertilization

(1) This item will consist of furnishing and applying fertilizer to all areas to be seeded according to the following specifications:

(2) Fertilizer will be a 1-1-1 ratio of N, P, and K, and will contain at least 13 lbs. of each per 100 lbs. of material.

Fertilizer rate (13-13-13 basis)	(14 lbs. per 1000 sq ft) or (600 lbs. per acre)

(3) One application of fertilizer will be applied at the time of planting as directed by the Contracting Officer's Technical Representative (COTR).

C. Mulching

(1) No mulching will be required on this contract.

D. No separate payment will be made for Permanent Vegetation Seeding, Fertilization and Mulching. Compensation for this subsidiary item shall be included in the payment for Bid Item 1, Channel Excavation, Sediment Removal.

Construction Specification 7—Construction Surveys

1. Scope

The work consists of performing all surveys, measurements, and computations required by this specification.

2. Equipment and material

Equipment for construction surveys shall be of a quality and condition to provide the required accuracy. The equipment shall be maintained in good working order and in proper adjustment at all times. Records of repairs, calibration tests, accuracy checks, and adjustments shall be maintained and be available for inspection by the engineer. Equipment shall be checked, tested, and adjusted as necessary in conformance with manufacturer's recommendations.

Material is field notebooks, stakes, templates, platforms, equipment, spikes, steel pins, tools, and all other items necessary to perform the work specified.

3. Quality of work

All work shall follow recognized professional practice and the standards of the industry unless otherwise specified in section 9 of this specification. The work shall be performed to the accuracy and detail appropriate for the type of job. Notes, sketches, and other data shall be complete, recorded neatly, legible, reproducible and organized to facilitate ease in review and allow reproduction of copies for job documentation. Survey equipment that requires little or no manual recording of field data shall have survey information documented as outlined in section 9 of this specification.

All computations shall be mathematically correct and shall include information to identify the bid item, date, and who performed, checked, and approved the computations. Computations shall be legible, complete, and clearly document the source of all information used including assumptions and measurements collected.

If a computer program is used to perform the computations, the contractor shall provide the engineer with the software identification, vendor's name, version number, and other pertinent data before beginning survey activities. Computer generated computations shall show all input data including values assigned and assumptions made.

The elevations of permanent and temporary bench marks shall be determined and recorded to the nearest 0.01 foot. Differential leveling and transit traverses shall be of such precision that the error of vertical closure in feet shall not exceed plus or minus 0.1 times the square root of the traverse distance in miles. Linear measurements shall be accurate to within 1 foot in 5,000 feet, unless otherwise specified in section 9 of this specification. The angular error of closure for transit traverses shall not exceed 1 minute times the square root of the number of angles turned.

The minimum requirements for placing slope stakes shall be at 100-foot stations for tangents, as little as 25 feet for sharp curves, breaks in the original ground surface and at any other intermediate stations necessary to ensure accurate location for construction layout and measurement. Slope stakes and cross sections shall be perpendicular to the centerline. Significant breaks in grade shall be determined for cross sections. Distances shall be measured horizontally and recorded to the nearest 0.1 foot. Side shots for interim construction stakes may be taken with a hand level.

Unless otherwise specified in section 9 of this specification, measurements for stationing and establishing the location of structures shall be made to the nearest 0.1 foot.

Elevations for concrete work, pipes, and mechanical equipment shall be determined and recorded to the nearest 0.01 foot. Elevations for earth work shall be determined and recorded to the nearest 0.1 foot.

4. Primary control

The baselines and bench marks for primary control, necessary to establish lines and grades needed for construction, are shown on the drawings and have been located on the job site.

These baselines and bench marks shall be used as the origin of all surveys, layouts, and measurements to establish construction lines and grades. The contractor shall take all necessary precautions to prevent the loss or damage of primary control points. Any stakes or control points lost or damaged by construction activity will be reestablished by the contractor or at contractor expense.

5. Construction surveys

Before work starts that requires contractor performed surveys, the contractor shall submit in writing for the engineer's review: the name, qualifications, and experience of the individuals to be assigned to the survey tasks.

***Method 1*—**Contractor performed surveys shall include:

- checking and any supplemental or interim staking
- performing quantity surveys, measurements, and computations for progress payment
- other surveys as described in section 9 of this specification

***Method 2*—**Contractor performed surveys shall consist of all work necessary for:

- establishing line and grade for all work
- setting slope stakes for all work
- checking and any supplemental or interim staking
- establishing final grade stakes
- performing quantity surveys, measurements, and computations for progress payment
- other surveys as described in section 9 of this specification

***Method 3*—**Contractor performed surveys shall consist of all work necessary for:

- establishing line and grade for all work
- setting slope stakes for all work
- checking and any supplemental or interim staking
- establishing final grade stakes
- performing quantity surveys, measurements, and computations for progress payments
- performing original (initial) and final surveys for determinations of final quantities
- other surveys as described in section 9 of this specification.

6. Staking

The construction staking required for the item shall be completed before work on any item starts. Construction staking shall be completed as follows or as otherwise specified in section 9 of this specification:

***Clearing and grubbing*—**The boundary of the area(s) to be cleared and grubbed shall be staked or flagged at a maximum interval of 200 feet, closer if needed, to clearly mark the limits of work. When contractor staking is the basis for determining the area for final payment, all boundary stakes will be reviewed by the engineer before start of this work item.

***Excavation and fill*—**Slope stakes shall be placed at the intersection of the specified slopes and ground line. Slope stakes and the reference stakes for slopes shall be marked with the stationing, required cut or fill, slope ratio, and horizontal distance from the centerline or other control line. The minimum requirements for placing slope stakes is outlined in section 3, Quality of work.

***Structures*—**Centerline and offset reference line stakes for location, alignment, and elevation shall be placed for all structures.

7. Records

All survey data shall be recorded in fully identified standard hard-bound engineering survey field notebooks with consecutively numbered pages. All field notes and printed data shall include the purpose or description of the work, the date the work was performed, weather data, sketches, and the personnel who performed and checked the work. Electronically generated survey data and computations shall be bound, page numbered, and cross referenced in a bound field notebook containing the index for all survey activities. All work shall follow recognized professional practice.

The construction survey records shall be available at all times during the progress of the work for examination and use by the engineer and when requested, copies shall be made available. The original field notebooks and other records shall be provided to and become the property of the owner before final payment and acceptance of all work.

Complete documentation of computations and supporting data for progress payments shall be submitted to the engineer with each invoice for payment as specified in section 9 of the specification. When the contractor is required to conduct initial and final surveys as outlined in section 5, Construction Surveys, notes shall be provided as soon as possible after completion to the engineer for the purpose of determining final payment quantities.

8. Payment

***Method 1*—**For items of work for which lump sum prices are established in the contract, payment is made as the work proceeds, after presentation of correct and accurate invoices by the contractor showing related costs and evidence of the charges of suppliers, subcontractors, and others for supplies furnished and work performed. Invoices for the total amount of the contract price will not be accepted until all surveys are complete and required documentation has been determined complete. If the total of such payments is less than the lump sum contract price for this item, the unpaid balance will be included in the final contract payment. Payment of the lump sum contract price will constitute full compensation for completion of all work under the bid item.

***Method 2*—**For items of work for which lump sum prices are established in the contract, payment is made as the work proceeds with progress payment amounts determined as a percentage of the total work planned as projected from the contractor's approved construction schedule. Payment of the lump sum contract price will constitute full compensation for completion of all work under this bid item.

Payment will not be provided under this item for the purchase price of materials or equipment having a residual value.

Compensation for any item of work described in the contract, but not listed in the bid schedule will be included in the payment for the item of work to which it is made subsidiary. Such items and the item to which they are made subsidiary are identified in section 9 of this specification.

9. Items of work and construction details

9. ITEMS OF WORK AND CONSTRUCTION DETAILS

Items of work to be performed in conformance with this specification and the construction details therefore are:

a. Subsidiary Item, Construction Surveys

(1) This item shall consist of all labor, equipment and supplies necessary for the Contractor to establish lines and grades and set centerline offset and slope stakes for all work, perform original, progress and final surveys for the determination of progress and final payment quantities including the computation of progress and final payment quantities, perform supplemental or interim staking for the Contractor's own use, and any other surveys the Contractor feels are required which are not specifically indicated to be provided by the NRCS.

The Contractor shall provide the NRCS with the coordinates and elevations of any Contractor set control points and baseline offset information within 24 hours of the request.

(2) In Section 5, Construction surveys, Method 3 shall apply. NRCS will provide the following:

a) hubs with benchmark elevation at 1000 foot intervals

b) channel centerline stakes at intervals not to exceed 250 foot. In the event of a concrete lining, the channel centerline stakes may be offset. Any field determinations of channel centerline location will be made only by the NRCS and shall not cause removal of existing top of channel banks.

(3) The Contractor shall be responsible for executing the work to the limits, lines, locations and grades established by the NRCS as shown on the drawings and as staked in the field.

(4) The Contractor shall also be responsible for maintaining and preserving all stakes and other marks established by the NRCS. The NRCS shall provide, on a one time basis, the hubs and lines indicated above.

If such stakes or marks are destroyed by the Contractor through Contractor negligence, or by vandalism, etc. the Contractor shall bear sole responsibility for replacement. Depending on personnel availability, the NRCS may replace them and deduct the expense of the replacement from any amounts due or to become due to the Contractor.

(5) The Contractor shall be responsible for all surveys of any kind required by the Contractor other than those listed above to be specifically provided by the NRCS. The Contractor shall furnish, at the Contractor's expense, all notebooks, stakes, templates, platforms, equipment, tools, materials, etc. required for the Contractor’s construction surveys.

(6) Persons considered qualified by the NRCS to perform Contractor construction surveys shall be certified or licensed land surveyors, registered engineers, or construction personnel who are deemed qualified based on previous performance or who can demonstrate through performance that they are capable and qualified to perform any surveys required by the Contractor. At least 72 hours prior to beginning construction activities, the Contractor shall submit, in writing, to the

Contracting Officer for approval, the resumes, experience or qualification statements and references for the individuals to be assigned Contractor construction survey responsibilities.

If the Contactor changes the individuals assigned Contractor construction survey responsibilities, the Contractor shall submit, in writing, to the Contracting Officer for approval, the resumes, experience or qualification statements and references for the new individuals to be assigned Contractor construction survey responsibilities at least 72 hours in advance of any pending surveys to be performed by the Contractor.

(7) In addition to the Section 5, Method 3 requirements, the Contractor construction surveys shall be in accordance with the following:

a) Original and final cross section surveys by the Contractor for the determination of final quantities shall be taken at intervals not to exceed 250 feet. These Contractor selected cross sections shall be taken at locations which conform to the appropriate typical section. One Contractor selected cross section shall be taken at each station shown in the plans and supplemented as necessary to meet the 250 foot interval requirement.

If there is a significant volume of non-sedimentary debris (greater than 15% channel blockage by debris) at any particular cross section location, the Contractor shall receive concurrence from the COTR prior to taking the cross section. The Contractor shall notify the COTR at least 24 hours in advance of taking the cross section in order to allow the NRCS to make the determination to proceed with the cross section in the "as is" condition, remove the debris prior to taking the cross section, shift the cross section location or add additional cross sections as necessary to obtain an accurate representation of the channel bottom excluding significant non-sedimentary debris.

Additional cross sections shall be taken as needed to show abrupt changes between cross sections in the bank line and/or channel bottom. Cross section stationing shall follow the convention established in the plans. Each cross section shall extend from canal right-of-way to canal right-of-way or beyond the anticipated spoil disposal limits on each side of the canal whichever is greater. Where a levee is adjacent to the canal, the cross section shall begin at the top of the levee on the unprotected side and end on the opposite side of the canal as stated above. It shall be the Contractor's responsibility to begin and end the original cross sections at such locations that original data is available for all work areas adjacent to the canal.

b) Quantity survey cross sections for progress payments by the Contractor shall be taken at intervals not to exceed 250 feet. These Contractor selected cross sections shall be taken at locations which conform to the appropriate typical section. One Contractor selected cross section shall be taken at each station shown in the plans and supplemented as necessary to meet the 250 foot requirement.

c) Channel centerline offset and slope stakes shall be placed at intervals not to exceed 250 feet and shall be supplemented as necessary where additional control is needed by the workers to construct the channel to the lines and grades specified.

(8) The Contractor shall notify the NRCS at least 48 hours in advance of any pending original, progress or final surveys to be performed by the Contractor. NRCS may,

at its' discretion, provide a survey observer to accompany the Contractor's survey crew or conduct additional quality control surveys as necessary.

(9) Contractor computations for determining the quantities for payment shall be by the Average End Area Method. Prior to beginning construction activities, the Contractor shall submit, in writing, to the Contracting Officer for review the method by which quantity computations shall be performed (i.e. MS Excel spreadsheets, volume computation software, etc). The submittal shall also include the name and version of the volume computation software along with the developer's contact information.

(10) The Contractor shall submit two (2) copies of survey data, notes, computations, etc., to the Contracting Officer at least 72 hours in advance of requesting payment for any quantities derived from such surveys. Notes, sketches and other data shall be complete, recorded neatly, legible, reproducible and organized in a manner that will allow interpretation and reproduction of copies for job documentation. The Contractor shall provide the NRCS with electronic copies on CD of end area and volume computations and data sets in ASCII format arranged in columns as follows: point number, northing, easting, elevation and description. The Contractor shall provide the NRCS with plotted cross sections showing both the pre-construction grade and the neat-line grade in digital .DGN, .DWG or .DXF format compatible with or convertible to be usable in MicroStation 2004 Edition, Version 8. The NRCS will confirm the calculated quantities before certifying payment quantities or making any payments.

(11) The Contractor shall take the appropriate precautions and use specialized equipment, procedures and techniques as necessary to accurately locate the pre-construction top of sediment grade and the post-construction channel grade. See Construction Specification 202, Channel Excavation, for a description of the pay limits.

(12) No sediment quantity surveys shall be made inside pipes, box culverts, or other small closed conduits. The sediment removed from inside pipes, box culverts, and other closed conduits will be considered subsidiary to channel sediment removal and will not be measured for payment. For additional details, see Construction Specification 202, Channel Excavation.

(13) No separate payment will be made for Construction Surveys. Compensation for this subsidiary item shall be included in the payment for <u>Bid Item 1, Channel Excavation, Sediment Removal.</u>

Construction Specification 8—Mobilization and Demobilization

1. Scope

The work consists of the mobilization and demobilization of the contractor's forces and equipment necessary for performing the work required under the contract. It does not include mobilization and demobilization for specific items of work for which payment is provided elsewhere in the contract. Mobilization will not be considered as work in fulfilling the contract requirements for commencement of work.

2. Equipment and material

Mobilization shall include all activities and associated costs for transportation of contractor's personnel, equipment, and operating supplies to the site; establishment of offices, buildings, and other necessary general facilities for the contractor's operations at the site; premiums paid for performance and payment bonds including coinsurance and reinsurance agreements as applicable; and other items specified in section 4 of this specification.

Demobilization shall include all activities and costs for transportation of personnel, equipment, and supplies not required or included in the contract from the site; including the disassembly, removal, and site cleanup of offices, buildings, and other facilities assembled on the site specifically for this contract.

This work includes mobilization and demobilization required by the contract at the time of award. If additional mobilization and demobilization activities and costs are required during the performance of the contract as a result of changed, deleted, or added items of work for which the contractor is entitled to an adjustment in contract price, compensation for such costs will be included in the price adjustment for the item or items of work changed or added.

3. Payment

Payment will be made as the work proceeds, after presentation of paid invoices or documentation of direct costs by the contractor showing specific mobilization and demobilization costs and supporting evidence of the charges of suppliers, subcontractors, and others. When the total of such payments is less than the lump sum contract price, the balance remaining will be included in the final contract payment. Payment of the lump sum contract price for mobilization and demobilization will constitute full compensation for completion of the work.

Payment will not be made under this item for the purchase costs of materials having a residual value, the purchase costs of materials to be incorporated in the project, or the purchase costs of operating supplies.

4. Items of work and construction details

(See next page.)

4. ITEMS OF WORK AND CONSTRUCTION DETAILS

Items of work to be performed in conformance with this specification and the construction details therefore are:

a. Subsidiary Item, Mobilization and Demobilization

(1) This item shall consist of mobilizing and demobilizing personnel and equipment to and from the site as necessary to perform the work within the scope of this contract.

(2) This item shall not include transportation of personnel, equipment and operating supplies between and within the work limit areas of this contract.

(3) Fences which must be cut or removed for access shall be repaired or replaced by the Contractor at his/her expense. The quality of replacement fencing shall meet or exceed the quality of fencing that was cut or removed.

(4) Access shall be as shown on the drawings. If alternate routes are obtained by the Contractor, they must be approved by the NRCS prior to use. All access routes shall be restored, by the Contractor, to a condition equal to or better than the condition prior to the commencement of work under this contract.

(5) No separate payment will be made for Mobilization and Demobilization. Compensation for this item shall be included in the payment for Bid Item 1, Channel Excavation, Sediment Removal.

Construction Specification 9—Traffic Control

1. Scope

The work shall consist of establishing traffic control and maintaining safe, convenient use of public roads and rights-of-way.

2. Traffic and access

The contractor's operations shall cause no unnecessary inconvenience to the public. The public rights-of-way shall be maintained at all times unless interruption is authorized by proper local authority. Contractor's authorized closing or detour plans shall be provided to the engineer for approval.

Safe and adequate access shall be provided and maintained to all public protection devices and to all critical utility control locations. Facility access shall be continuous and unobstructed unless otherwise approved.

3. Storage of equipment and material in public streets

Construction materials and equipment shall not be stored or parked on public streets, roads, or highways. During any material or equipment loading or unloading activities that may temporarily interfere with traffic, an acceptable detour shall be provided for the duration of the activity. Any associated expense for this activity is the responsibility of the contractor.

Excavated material, including suitable material that is intended for adjacent trench backfill or other earth backfill as specified in section 5 of this specification, shall not be stored on public streets, roads, or highways that remain in service for the public. Any waiver of this requirement must be obtained from the proper local authority and approved by the engineer. All excess and unsuitable material shall be removed from the site as soon as possible. Any spillage shall be removed from roadways before they are used by the public.

4. Street closures, detours, and barricades

The contractor shall comply with the requirements of all applicable responsible units of government for closure of any street, road, or highway. The contractor shall provide the required barriers, guards, lights, signs, temporary bridges, and flaggers together with informing the public of any detours and construction hazards by the most suitable means available, such as local newspapers or radio stations. The contractor is also responsible for compliance with additional public safety requirements that may arise during construction. The contractor shall furnish, install, and, upon completion of the work, promptly remove all signs, warning devices, and other materials used in the performance of this work.

Unless otherwise specified, the contractor shall notify, in writing, the fire chief, police chief, county sheriff, state patrol, schools that operate school buses, or any other government official as may be appropriate no less than 7 days before closing, partly closing, or reopening any street, road, or highway.

Unless otherwise specified, the contractor shall furnish to the engineer a written plan showing the proposed method of signing, barricading for traffic control, and safety for street detours and closures.

All temporary detours will be maintained to ensure use of public rights-of-way is provided in a safe manner. This may include dust control, grading, and graveling as required in section 7 of this specification.

5. General and specific references

All signs, signals, barricades, use of flaggers, and other traffic control and public safety devices shall conform to the general requirements set forth in the Manual of Uniform Traffic Control Devices (MUTCD) and the latest edition of *Standard Highway Signs and Standard Alphabets for Highway Signs* and/or OSHA *Construction Industry Standards (29 CFR Part 1926), Subpart G, Signs, Signals, and Barricades* unless otherwise specified in section 7 of this specification.

6. Measurement and payment

For items of work for which specific lump sum prices are established in the contract, payment for the work is made at the contract lump sum price. Progress payments will be made based upon the percentage of estimated total time that traffic control will be required unless otherwise specified in section 7 of this specification. Payment will constitute full compensation for all flaggers, labor, materials, equipment, and all other items necessary and incidental to completion of the work.

Compensation for any item of work described in the contract, but not listed in the bid schedule will be included in the payment for the item of work to which it is made subsidiary. Such items and items to which they are made subsidiary are identified in section 7 of this specification.

7. Items of work and construction details

(See next page.)

7. ITEMS OF WORK AND CONSTRUCTION DETAILS

Items of work to be performed in conformance with this specification and the construction details therefore are:

a. Subsidiary Item, Traffic Control

(1) This item shall consist of providing the necessary traffic control devices (signs, signals, markings, personnel, etc.) where needed, to allow for the safe and expeditious movement of traffic through and adjacent to the construction area for the duration of this contract.

(2) The Contractor shall have a comprehensive traffic control plan. The plan shall address, as a minimum, the following requirements:

(a) The design and application of all signals, pavement markings, channelizing devices, and warning signs shall conform to the *"Louisiana Manual on Uniform Traffic Control Devices*", 1988 Edition, as revised.

(b) Channelizing and delineation devices shall be used to mark all construction areas. These shall be Type II and/or Type III barricades, and/or barrels, all fully reflectional with lights, and weighted with sandbags.

(c) Any traffic control devices (signs, signals, markings) which exist as part of the normal pre-construction scheme, and that do not apply to an appropriate situation, or are in the way of construction, shall be covered, removed, or relocated by the Contractor.

(d) The roadway and all traffic control devices shall be restored to original conditions by the Contractor.

(e) All excavations shall be covered, backfilled, or protected, (see “b”, above) at night and when work is not in progress. Excavated pits, etc., shall be fully fenced or barricaded (see “b”, above) to prevent access by pedestrians.

(f) All materials/machines shall be stored outside of the road surface, creating no sight distance problems, and fully delineated as in “b”, above.

(g) If sections of roadway are totally closed, the Contractor shall notify the sheriff's traffic division, 911 operators, the fire department, and any major traffic generators (i.e. schools, etc.). A minimum of three working days advance notice will be required.

(h) On totally closed sections of the roadway, the Contractor shall provide access for local traffic only.

(i) The Contractor shall check traffic control devices on a daily basis as a minimum when beginning and ending the work day, to insure adherence to the plans and proper adequacy of devices for day and night visibility. On weekends, devices shall be checked a minimum of once per day.

(j) Flagman and/or sheriff's control shall be provided as specified by the Contracting Officer's Technical Representative (COTR).

(k) Yellow, high visibility pennant barrier flagging (nylon rope with plastic pennants) shall be strung between Type II barricades and barrels/drums, only as directed by the COTR.

(l) The traffic control device plan indicates general traffic control devices to be used on this project. It is anticipated that conditions will vary depending on the phase under construction and that the arrangement of those devices will be reviewed on a daily basis. Should the Contractor have any question as to the arrangement of those devices, the COTR shall be notified to make an inspection of the site.

(m) Contractor shall provide for the movement of pedestrians for the entire duration of the contract. To the extent possible, the Contractor shall allow unobstructed pedestrian movements on existing sidewalks. If existing sidewalks must be obstructed, the Contractor shall provide for the movement of pedestrians by posting appropriate signing, such as, "Sidewalk Closed-Use Other Side of Street". Signing shall be reflectorized and lighted at night.

(n) Where trenches are excavated outside the roadway surface, the Contractor shall provide at least one pedestrian accessible crossing for each dwelling impacted by trench construction.

(o) To the extent possible, the Contractor shall maintain and/or provide at least one alternate public access to area businesses when the pre-construction access is closed by construction activities.

(3) No separate payment will be made for Traffic Control. Compensation for this subsidiary item shall be included in the payment for Bid Item 1, Channel Excavation, Sediment Removal.

Construction Specification 202—Channel Excavation

1. Scope
The work shall consist of the excavation of all materials necessary for the construction of channels and the disposal of all excavated materials.

2. Classification
Channel excavation shall be unclassified and shall include all materials encountered regardless of their nature or the manner in which they are removed.

3. Marking
The limits of the channels to be excavated will be marked by means of stakes, flags, or other suitable methods.

4. Excavation
Channels shall be excavated as closely as practicable to the lines, grades, and cross sections shown on the plans, considering the character of the material and the excavation methods employed. The excavated surfaces shall be reasonably smooth. In no case shall the excavated cross-sectional area of the channel be less than the specified area.

5. Disposal of excavated material
Material excavated from the channel shall be disposed of in the locations and in the manner shown on the drawings or as specified in Section 7 of this specification.

6. Measurement and payment
For items of channel excavation, for which specific unit prices are established in the contract, the volume of excavation will be measured within the specified limits and computed to the nearest cubic yard by the method of average cross-sectional end areas. Regardless of quantities excavated, the measurement for payment will be made to the specified pay limits.

Payment for items of work listed in the bid schedule will be made at the contract unit price. Such payment will constitute full compensation for all labor, materials, equipment, and all other items necessary and incidental to the performance of the work. Compensation for any item of work described in the contract but not listed in the bid schedule will be included in the payment for the item of work to which it is made subsidiary. Such items and the items to which they are made subsidiary are identified in Section 7 of this specification.

Method 1- The pay limits for channel excavation shall be the neat lines and grades shown on the drawings.

Method 2- The pay limits for channel excavation shall be the neat lines and grades shown on the drawings plus an allowable overcut on the channel bottom up to the limits specified in Section 7.

All Methods - The volume of spoil required to be spread will not be measured directly. The volume to be paid for will be considered equal to the volume of required channel excavation from which such spoil resulted.

The volume of spoil required to be hauled will not be measured directly. The volume to be paid for will be considered equal to the volume of required channel excavation from which such spoil resulted.

7. Items of work and construction details

Items of work to be performed in conformance with this specification and the construction details therefore are:

a. Bid Item 1, Channel Excavation, Sediment Removal

(1) This item shall consist of the removal of all sediment deposited by Hurricane Katrina from within the channels and the placement and dressing of the resulting spoil to the specified limits shown on the drawing or as staked in the field. When all removed sediment cannot be placed on-site, this item shall also include the loading, hauling, and off-site disposal of the excavated sediments.

Excavation shall start at the downstream end of channel and proceed upstream. Over excavation for equipment access or other reasons will not be permitted.

(2) No spoil shall be placed within a minimum of ten (10) feet bridges and culverts. No spoil shall be placed within the slopes of side drains (including ditches, drains, canals and streams) that enter the channels being excavated.

(3) No material shall be deposited in or allowed to enter any ditch or other watercourse or gaps in existing spoil banks.

The end slopes of placed spoil at gaps or openings shall be 4:1 or flatter.

Temporary or permanent placement of logs/debris into tributaries, side ditches, or other defined water entrances will not be allowed for any reason. Should the Contractor need to cross such watercourses as part of his/her sediment removal operation then the Contractor shall bridge such watercourses using temporary bridging materials, such as equipment mats, which will not obstruct the flow of the watercourse.

(4) It shall be the responsibility of the Contractor to clean out through parish road culverts that are within the work limits. It shall be the responsibility of the Contractor to clean out under parish road bridges that are within the work limits to the lines and grades shown on the drawings.

(5) When work is to be done in the vicinity of a conduit, such as a gasline, waterline, or pipeline, or an electrical cable or other utility, it shall be the Contractor's responsibility to notify each utility owner of the time construction work is planned in the vicinity of their utility. A copy of such notification shall be sent to the Contracting Officer. Such notification shall be made far enough in advance that said interested parties may make all necessary adjustments of their utility fixtures and appurtenances within or adjacent to the limits of construction.

When the Contractor’s operation requires travel over a buried conduit or other utility, the Contractor shall protect the buried conduit or utility as necessary to prevent damages to the buried conduit or utility. Any damages shall be repaired at the Contractor’s expense.

(6) Care shall be taken when placing and dressing the spoil to minimize damages to existing vegetation. Clearing for access and/or placement of spoil resulting from the sediment removal operations shall be limited only to that absolutely necessary for equipment operation and placement and dressing of spoil. All woody materials cleared or damaged shall be considered as debris and disposed of in accordance with Construction Specification

203, Channel Obstruction Removal.

Living Live Oak Trees shall not be damaged or removed. Spoil shall not be placed within the drip line of any Live Oak Tree. Spoil placed outside the drip line of any Live Oak Tree shall be dressed and graded so that positive drainage is maintained away from the Live Oak Tree. No water shall be allowed to pond around any Live Oak Tree.

Trees and other woody vegetation that must be cleared shall be removed in such a manner that the remaining stumps are cut parallel to the ground and extend no higher than 6 to 10 inches above the ground surface.

(7) The excavated material shall be deposited at the locations and to the lines and grades shown on the drawings and as staked in the field. Placement of on-site spoil shall not be allowed outside the canal right-of-way unless otherwise approved by the Contracting Officer's Technical Representative (COTR), Sponsor and the property owner in writing. At the time of excavation, the spoil shall be placed in a manner that will provide drainage away from the channel top bank when possible but shall under no circumstances block or impede the natural drainage pattern from adjacent property that existed prior to construction.

Placement of spoil shall be terminated at a specific location if the spoil flow or runoff has or can be reasonably expected to re-enter the excavated channel or any other watercourse. The Contractor is responsible for the removal of any sediment that re-enters the excavated channel or any other watercourse during the contract period. It is expected that the spoil material will be very soft in consistency and will have a tendency to "run". The Contractor shall take the necessary actions (i.e. silt fencing, hay bale fences, etc) to insure that the spoil will not run back into the channel. Such actions shall be a part of the Contractor's Pollution Control Plan and shall be provided in conformance with the requirements of Construction Specification 5, Pollution Control.

When the volume of excavated sediment exceeds the capacity of the limits allowed for placement on the spoil bank or the sediment removal operations are in a developed area then the following shall apply as concurred in by the COTR. The excess spoil shall be loaded and hauled to an approved spoil bank area within the project area or to an approved spoil disposal site. The Contractor shall provide to the Contracting Officer the intended location for disposal of excess spoil at least three (3) days prior to the start of work. The Contractor is responsible for payment of any tipping fees associated with the spoil disposal.

(8) Dressing of spoil shall be carried on concurrently with the excavation of the adjacent channel.

Spoil shall be bucket dressed so as to provide for a smooth, neat and uniform finish free of depressions or track or wheel ruts. See Construction Specification 6, Seeding, Sprigging and Mulching, for the seeding requirements.

(9) **Trees, stumps and all other debris collected during excavation operations shall not be placed within the spoil**. This material shall be considered debris and disposed of in accordance with Construction Specification 203, Channel Obstruction Removal.

(10) No separate payment will be made for loading spoil, hauling spoil, off-site spoil disposal or on-site spoil dressing. Compensation shall be included in the payment for Bid Item 1, Channel Excavation, Sediment Removal.

(11) No separate measurement and payment will be made for sediment removal inside pipes,

box culverts and other closed conduits. Such work shall be considered as subsidiary to channel sediment removal. Compensation shall be included in Bid Item 1, Channel Excavation, Sediment Removal.

(12) In Section 6, Measurement and payment, payment will be by Method 1. Such payment will constitute full compensation for related subsidiary items, "Pollution Control"; "Permanent Vegetation Seeding, Fertilization and Mulching"; “Construction Surveys”; “Mobilization and Demobilization”; “Traffic Control”; and “Channel Obstruction Removal, Debris Removal”. Measurement for payment of sediment removal shall be as specified in Section 6 except that cross sections for payment shall be taken at a maximum of 250 foot intervals. See Construction Specification 7, Construction Surveys, for additional requirements.

Construction Specification 203—Channel Obstruction Removal

1. Scope

The work shall consist of the cleanup of designated channel areas consisting of the removal and disposal of trees, logs, stumps, brush, tops, rubbish, debris and other items as specified in Section 8 deposited in the channel.

2. Access

Access shall be designated by NRCS unless alternate routes are obtained by the Contractor and approved by NRCS. Some limited mechanized land clearing may be required for alternate access routes. All access routes shall be restored, by the Contractor, to the condition prior to the commencement of work under this contract.

3. Limits of Work

Each end of each reach of the channel and its tributaries designated for obstruction removal will be referenced to identified roads or other structures or landmarks or be marked by the Government Representative by means of stakes, flags, or other suitable markers.

4. Removal

Flow obstructions shall be removed by methods including, but not limited to, sawing, cabling, winching, lifting, or dragging. No excavation for floatation or any other reasons will be allowed.

The following guidelines will be used to determine which trees, stumps, and brush to remove. **The final determination will be made by the Contracting Officer's Technical Representative (COTR).**

a. All downed trees, brush, limbs, tops, vines, and other washed-in woody vegetative materials lying completely or partially within the stream banks shall be removed. Any additional removal limits shall be as shown on the drawings or stated in Section 8.

b. Undermined or storm damaged trees within or outside the banks which are still standing but likely to fall into the stream shall be removed.

c. Stumps of downed trees within the channel banks shall not be removed unless otherwise noted in Section 8 of this specification.

All building materials, manufactured items, and other loose foreign debris lying completely or partially within the limits of designated areas shall be removed.

All displaced marsh vegetation and organic soil deposited within the channel as a result of the hurricane within the limits of the designated areas shall be removed. Excavation shall be limited to that necessary to restore the channel to its pre-storm cross section and configuration. No deepening or widening of the channel beyond its pre-storm limits will be allowed.

5. Disposal

All material produced from "Channel Obstruction Removal", shall be hauled to the nearest public landfill or disposed of as specified in Section 8 of this specification.

Sediment removed from the watercourses shall be placed and spread as specified in Section 8. No sediment shall be placed on improved property except where directed or allowed by NRCS to fill stump holes, ruts, and other local depressions. Alternate methods of disposal proposed by the Contractor must

be approved by NRCS.

Temporary or permanent placement of logs/debris into tributaries, side ditches, floodplains or other defined water entrances to the watercourse being cleaned will not be allowed for any reason. Should the Contractor need to cross such water entrances as part of his/her debris removal operation then the Contractor shall bridge such watercourses using temporary bridging materials, such as equipment mats, which will not obstruct the flow of the side drains. Should the Contractor need to cross the watercourse being cleaned, the same crossing methods shall be utilized.

6. Special Requirements

Roadways constructed in the work areas shall be kept to the minimum necessary. No grading for equipment to work or benching of the channel sides will be permitted without the concurrence of NRCS.

All saw cuts shall be made parallel to and as close to ground level as the cutting tools will permit, but no higher than 6”- 10” above the ground.

The Contractor shall take reasonable precautions to prevent further damage to the channel and its environment to include channel banks, fishery resources, and undamaged trees. The Contractor shall provide tanks or barrels to be used for off-site disposal of chemical pollutants such as drained lubricating or transmission oils, greases, etc. produced as a by product of this work. Washing, fueling, or servicing of equipment shall be avoided where spillage or wash water can enter the watercourse.

The Contractor shall not operate heavy equipment such as crawler tractors and tracked backhoes within flowing channels. Any operation of heavy equipment within the banks of the watercourse must be approved by NRCS.

The number of channel crossings shall be kept to a minimum. Materials used to form channel crossings shall be removed once the work for the subject reach is completed.

The Contractor shall backfill holes in the channels and channel banks resulting from stump removal **in residential and other landscaped areas**. Backfill shall be the best fill material available from within the channel area and within fifty (50) feet of the stump hole. Upon occasion, spoil may not be available. In such cases, fill material shall be hauled into the site to fill the stump holes. . In residential or other landscaped areas, the fill used to backfill the stump holes shall be topsoil. All track or wheel ruts created as a result of the debris removal operations shall be removed by dressing the area or by backfilling as prescribed above for stump holes.

All track or wheel ruts created as a result of the debris removal operations within the removal limits along the channel, access routes, and disposal sites shall be removed by dressing the area or by backfilling as prescribed above for stump holes. Upon completion of dressing operations all these areas shall be seeded in accordance with Construction Specification 6.

Fences which must be cut or removed for access shall be repaired or replaced by the Contractor at his/her expense. The quality of replacement fencing shall meet or exceed the quality of fencing that was cut or removed.

The Contractor shall take all reasonable precautions to prevent further damage to structures, utilities, or other fixed improvements and shall promptly repair or replace at his expense any such improvements damaged by his operations.

The Contractor shall coordinate with the appropriate road department, the methods and manners of traffic control. See Construction Specification 9, Traffic Control, for additional requirements.

7. Measurement and payment

Payment will be made on a lump sum basis. Such payment shall be considered full compensation for all materials, labor, equipment, tools, seeding and other items necessary and incidental to complete the work.

8. Items of work and construction details

Items of work to be performed in conformance with this specification and the construction details therefore are:

a. Subsidiary Item, Channel Obstruction Removal, Debris Removal

1) This item shall consist of the removal and disposal of all obstructions caused by debris such as trees, limbs, building materials, metal, automobiles, ATV's, white goods, etc. deposited by Hurricane Katrina from within the specified limits shown on the drawing or as staked in the field.

2) The work limits shall be as shown on the drawings. When debris removal is required at bridge and culvert locations, the work limits shall be the distance necessary to remove all floating and submerged accumulated debris. At bridges and culverts, both sides of the channel may be used as work sides if conditions warrant.

3) All woody debris within the work limits shall be removed. Debris longer than 18 inches and having a diameter greater than 2 inches within the work limits shall be removed. This is to include, but is not limited to all debris (trees, root balls which have been displaced, etc.) that is a part of the debris within the work limits. Dead trees that are still standing within the work limits shall be removed and disposed of. Leaning trees, (those which are leaning over the channel and are identified for removal), shall be cut off at the ground line leaving the root mass in place. If any part of a downed or leaning tree is within the lateral work limits, the entire tree shall be removed. If the root mass of such tree is outside the work limits, the tree shall be cut off at the root mass and the root mass shall remain, with the exception of root masses in residential yards which shall be removed as per the following stipulations as concurred in by the COTR. The root mass of any tree, within the work limits, designated for removal, shall only be left in place if 50% or more of the root mass is still in direct contact with the soil. Root masses of trees, within the work limits, that are designated for removal and which are less than 50% in contact with the soil shall be removed, unless in the opinion of the COTR the removal of such root mass would cause a potentially erosive condition. Any hanging tree tops or limbs within the work limits shall be removed and disposed of. The Contractor shall take care to not to damage any existing trees; however if any trees are damaged by the debris removal operations, they shall be removed and disposed of as concurred in by the COTR

4) Sediment removal shall conform to Construction Specification 202, Channel Excavation. No materials considered debris as described will be allowed to be placed in the spoil resulting from the removal of sediment. Any debris encountered as a result of the sediment removal shall be disposed of as prescribed within this specification.

5) Prior to the Contractor being issued a notice to proceed, the Contractor shall submit to

NRCS in writing the method of storm related woody debris disposal which he/she intends to use. The proposed method must be approved by NRCS prior to the start of work. Either of the following methods of disposal may be used, if approved by NRCS:

a) All storm related vegetative debris including dislodged stumps caused by Hurricane Katrina shall be chipped. Chips shall be blown and spread evenly onto the top bank (work side work area) and into the adjacent wooded areas. At no time shall chips be more than 6 inches deep. Placing chips within the flow lines of any mainline or side channels will not be allowed. The chipping operation shall be such that it will not allow the chips to re-enter the channel being worked. Logs and stumps too large for the size chipper that the Contractor has chosen to use may be cut into a size which said chipper will handle or loaded and hauled to an approved CD disposal site.

b) All storm related vegetative debris (trees) and building materials other than white goods removed from within the work limits shall be disposed of by removal from the work location, loading, and hauling to an approved CD disposal site. The Contractor shall provide to the Contracting Officer the intended location for disposal of this debris at least three days prior to the start of work. The Contractor is responsible for payment of any tipping fees associated with the disposal.

6) All debris removed from the reach that is not acceptable to be disposed of at a CD approved facility, such as white goods, shall be disposed of by loading and hauling to any federal, state or locally approved public landfill. The Contractor shall provide to the Contracting Officer the intended location for disposal of this debris at least three days prior to the start of work. The Contractor is responsible for payment of any tipping fees associated with the disposal.

7) The Contractor is responsible for any debris, which his operation may dislodge and cause to float downstream of the work area.

8) Any hazardous material encountered, such as batteries, used motor oil, scrap tires, white goods, any item which could contain CFC's, etc., shall be loaded and hauled to an approved hazard waste disposal site.

9) At least 24 hours prior to the removal of an abandoned vehicle or vessel such as automobiles, trailers, mobile homes, motorcycles, boats, etc from the channel, notification shall be made to the Abandoned Vehicle Point of Contact as specified in the Special Provisions. The Contractor shall remove the vehicle or vessels from within the channel or the interior of the work limits and move it to a location that is on the edge of the work limits immediately adjacent to the public right-of-way such that it is accessible to normal towing and collection vehicles. The abandoned vehicle or vessel shall not be placed on private property adjacent to the work limits unless written permission is granted from the private landowner.

10) No separate payment will be made for Channel Obstruction, Debris Removal. Compensation for this subsidiary item shall be included in the payment for <u>Bid Item 1, Channel Excavation, Sediment Removal.</u>