United States Department of Agricultu
Natural Resources Conservation Service

OMB No. 0578-0030
NRCS-PDM-20

DAMAGE SURVEY REPORT (DSR)
Emergency Watershed Protection Program – Recovery

Section 1A

NRCS Entry Only
Eligible: YES X NO ____
Approved: YES X NO ____
Funding Priority Number (from Section 4) 2de
Limited Resource Area: YES ____ NO X

Date of Report: 3/18/2006

DSR Number: 023-05-016R Project Number:

Section 1B Sponsor I

Sponsor Name: Gravity Drainage District 3

Address: P.O. Box 1067

City/State/Zip: Cameron, Louisiana 70631

Telephone Number: (337) 794-1661 Fax: _____

Section 1C Site Location Information

County: Cameron State: LA Congressional District: 7

Latitude: Upstream – 29.79889 Downstream – 29.80139
Longitude: Upstream -- -93.3199 Downstream -- -93.3207
Section: 31 Township: 14 S Range: 9 W

UTM Coordinates: _____

Drainage Name: WP- 187 Reach: 730 ft.

Damage Description: Sediment and light house hold debris deposited in channel and along banks of channel.

Section 1D Site Evaluation

All answers in this Section must be YES in order to be eligible for EWP assistance.

Site Eligibility	**YES**	**NO**	**Remarks**
Damage was a result of a natural disaster?*	X		Hurricane Rita
Recovery measures would be for runoff retardation or soil erosion prevention?*	X		
Threat to life and/or property?*	X		
Event caused a sudden impairment in the watershed?*	X		
Imminent threat was created by this event?**	X		
For structural repairs, not repaired twice within ten years?**	X		
Site Defensibility			
Economic, environmental, and social documentation adequate to warrant action? (Go to pages 3, 4, 5 and 6 ***)	X		
Proposed action technically viable? (Go to Page 9 ***)	X		

Have all the appropriate steps been taken to ensure that all segments of the affected population have been informed of the EWP program and its possible effects? YES X NO ____

Comments: Local Gravity Drainage District has been consulted.

* Statutory
** Regulation
*** DSR Pages 3 through 6 and 9 are required to support the decisions recorded on this summary page. If additional space is needed on this or any other page in this form, add appropriate pages.1 of 14

DSR NO: 023-05-016R

Section 1E Proposed Action

Describe the preferred alternative from Findings: Section 5 A: Remove storm deposited sediment and debris from channel and within 15 foot right-of-way of channel, accessing from one side of the channel. Sediment will be disposed of using the previously established spoil bank to the maximum extent possible. Debris will be disposed of in an approve landfill.

Total installation cost identified in this DSR: Section 3:

Section 1F NRCS State Office Review and Approval

Reviewed By: _____ Date Reviewed: 7/10/2006
State EWP Program Manager

Approved By: Donald W. Gohmert Date Approved: 7/11/06
State Conservationist

PRIVACY ACT AND PUBLIC BURDEN STATEMENT

NOTE: The following statement is made in accordance with the Privacy Act of 1974, (5 U.S.C. 552a) and the Paperwork Reduction Act of 1995, as amended. The authority for requesting the following information is 7 CFR 624 (EWP) and Section 216 of the Flood Control Act of 1950, Public Law 81-516, 33 U.S.C. 701b-1; and Section 403 of the Agricultural Credit Act of 1978, Public Law 95-334, as amended by Section 382, of the Federal Agriculture Improvement and Reform Act of 1996, Public Law 104-127, 16 U.S.C. 2203. EWP, through local sponsors, provides emergency measures for runoff retardation and erosion control to areas where a sudden impairment of a watershed threatens life or property. The Secretary of Agriculture has delegated the administration of EWP to the Chief or NRCS on state, tribal and private lands.

Signing this form indicates the sponsor concurs and agrees to provide the regional cost-share to implement the EWP recovery measure(s) determined eligible by NRCS under the terms and conditions of the program authority. Failure to provide a signature will result in the applicant being unable to apply for or receive a grant the applicable program authorities. Once signed by the sponsor, this information may not be provided to other agencies. IRS, Department of Justice, or other State or Federal Law Enforcement agencies, and in response to a court or administrative tribunal.

The provisions of criminal and civil fraud statutes, including 18 U.S.C. 286, 287, 371, 641, 651, 1001; 15 U.S.C. 714m; and 31 U.S.C. 3729 may also be applicable to the information provided. According to the Paperwork Reduction Act of 1995, an agency may not conduct or sponsor, and a person is not required to respond to a collection of information unless it displays a valid OMB control number. The valid OMB control number for this information collection is 0578-0030. The time required to complete this information collection is estimated to average 117/1.96 minutes/hours per response, including the time for reviewing instructions, searching existing data sources, field reviews, gathering, designing, and maintaining the data needed, and completing and reviewing the collection information.

USDA NONDISCRIMINATION STATEMENT

"The U.S. Department of Agriculture (USDA) prohibits discrimination in all its programs and activities on the basis of race, color, national origin, age, disability, and where applicable, sex, marital status, familial status, parental status, religion, sexual orientation, genetic information, political beliefs, reprisal, or because all or part of an individual's income is derived from any public assistance program. (Not all prohibited bases apply to all programs.)

Persons with disabilities who require alternative means for communication of program information (Braille, large print, audiotape, etc.) should contact USDA's TARGET Center at (202) 720-2600 (voice and TDD). To file a complaint of discrimination write USDA, Director of Civil Rights, 1400 Independence Avenue, SW, Washington, DC 20250-941 0 or call (800)795-3272 (voice) or (202)720-6382 (TDD). USDA is an equal opportunity provider and employer.

Civil Rights Statement of Assurance

The program or activities conducted under this agreement will be in compliance with the nondiscrimination provisions contained in the Titles VI and VII of the Civil Rights Act of 1964, as amended; the Civil Rights Restoration Act of 1987 (Public Law 100-259); and other nondiscrimination statutes: namely, Section 504 or the Rehabilitation Act of 1973, Title IX of the Amendments of 1972, the Age Discrimination Act of 1975, and the Americans with Disabilities Act of 1990. They will also be in accordance with regulations of the Secretary of Agriculture (7 CFR 15, 15a, and 15b), which provide that no person in the United States shall on the grounds of race, color, national origin, gender, religion, age or disability, be excluded from participation in, be denied the benefits of, or otherwise subjected to discrimination under any program or activity receiving Federal financial assistance from the U.S. Department of Agriculture or any agency thereof.

Section 2 Environmental Evaluation

2A Resource Concerns	2B Existing Condition	2C Alternatives and Effects		
		Proposed Action	**No Action**	**Alternative**
		Remove sediment, place on existing spoil on the east side of channel; remove debris, dispose of in approved landfill, accessing from one side of channel	Leave storm deposited sediment and debris in the channel.	Remove sediment and debris, dispose of in approved landfill, accessing from one side of channel
		2D Effects of Alternatives		
Soil				
Soil Quality	Excess water in areas adjacent to channel is causing extended period of soil saturation	Sediment and debris removal will allow natural drainage of adjacent land	Continued saturation will cause anaerobic activity in soils adjacent to channel	Sediment and debris removal will allow natural drainage of adjacent land
Soil Compaction	No compaction	Equipment may cause limited compaction	No compaction	Equipment may cause limited compaction
Water				
Overall stream health	SVAP=1 (poor)	SVAP=1 (poor)	SVAP=1 (poor)	SVAP=1 (poor)
Flooding	Excess debris increases depth and duration of flooding on adjacent land	Restore pre-storm conditions to channel and adjacent land	Flooding will continue and/or worsen	Restore pre-storm conditions to channel and adjacent land
Air				
Odor	Stagnate water emitting foul odor	Restoration of flow will eliminate odor	Stagnate water emitting foul odor	Restoration of flow will eliminate odor
Plant				
Plant health and vigor	Excess water on adjacent range land negatively impacting grasses	Sediment and debris removal will restore plant health to adjacent landscape	Excess water on adjacent range land negatively impacting grasses	Sediment and debris removal will restore plant health to adjacent landscape
Animal				
Migratory Birds	Habitat for neo-tropicals is heavily damaged	Project will not impact	Habitat will improve over time for neo-tropicals	Project will not impact
Other				
vectors	Stagnant pools increasing mosquito reproduction	Reduce stagnant pools, reduce threat of insect-born disease	Increase in potential for disease outbreak	Reduce stagnant pools, reduce threat of insect-born disease
aesthetics	Poor due to debris and accumulated sediment	Restore potential for aesthetics improvement to landscape	Poor due to debris and accumulated sediment	Restore potential for aesthetics improvement to landscape

DSR NO: 023-05-016R

Section 2E Special Environmental Concerns

Resource Consideration	Existing Condition	Alternatives and Effects		
		Proposed Action	No Action	Alternative
Clean Water Act Waters of the U.S.	CWA and Water Quality Certification jurisdiction	CWA permit and Water Quality Cert. required	Increase blockage/clutter permit not required	CWA permit and Water Quality Cert. required
Coastal Zone Management Areas	Project within Coastal Management Zone	Coastal Use Permit required	Permit not required	Coastal Use Permit required
Coral Reefs	None present	N/A	N/A	N/A
Cultural Resources	None identified - (FOTG) State level review needed	None identified - (FOTG) State level review needed	None identified - (FOTG) State level review needed	None identified None identified -(FOTG) State level review needed
Endangered and Threatened Species	Species listed in Parish (FOTG/USFWS)	None observed on-site, suitable habitat on-site not likely (field investigation)	N/A	None observed on-site, suitable habitat on-site not likely (field investigation)
Environmental Justice	N/A	N/A	N/A	N/A
Essential Fish Habitat	N/A	N/A	N/A	N/A
Fish and Wildlife Coordination	No stream modification proposed in project	LDWF will be consulted	N/A	LDWF will be consulted
Floodplain Management	Floodplain function is impaired	Restore floodplain to pre-storm conditions	floodplain function is impaired	Restore floodplain to pre-storm conditions
Invasive Species	No invasive species observed on site	N/A	N/A	N/A
Migratory Birds	Habitat for neo-tropicals is degraded by wind and storm surge damage	Project will not impact habitat	Habitat will recover over time	Project will not impact habitat
Natural Areas	Vegetation in adjacent range land is stressed by excess flooding	Restore potential for recovery of adjacent range land	Excess flooding will continue or worsen impacts to plant comm	Restore potential for recovery of adjacent range land
Prime and Unique Farmlands	(FOTG) (Soil Survey) none identified	(FOTG) (Soil Survey) none identified	(FOTG) (Soil Survey) none identified	(FOTG) (Soil Survey) none identified
Riparian Areas	Herbaceous riparian area is stressed by excessive flooding	Restore potential for recovery of adjacent riparian area	Excess flooding will continue or worsen impacts to plant comm	Restore potential for recovery of adjacent riparian area
Scenic Beauty	Debris negatively impacts	Debris removal will increase potential for improving landscape	Debris negatively impacts	Debris removal will increase potential for improving landscape
Wetlands	Potential impact in wetlands adjacent to channel by altered hydrology	Restoration of hydrology in channel restores wetland function	Impact in wetlands adjacent to channel by altered hydrology	Restoration of hydrology in channel restores wetland function
Wild and Scenic Rivers	None present	N/A	N/A	N/A

Completed By: Brian Baiamonte Date: 03/18/2006

DSR NO: 023-05-016R

Section 2F Economic

This section must be completed by each alternative considered (attach additional sheets as necessary).

	Future Damages ($)	Damage Factor (%)	Near Term Damage Reduction
Properties Protected (Private)			
5 Homes (1500 sq.ft., wood frame, raised) - $40,712.16	**$203,560.80**	**10%**	**$20,356.08**
SEE ATTACHED WORKSHEET			
Properties Protected (Public)			
Business Losses			
Other			
Total near term damage reduction			**$20,356.08**
Net benefit (Total near term damage reduction minus cost from sect. 3)			

Completed By: Brian Baiamonte Date: 06/05/2006

Section 2G Social Consideration

This section must be completed by each alternative considered (attach additional sheets as necessary).

	YES	NO	Remarks
Has there been a loss of life as a result of the watershed impairment?		X	
Is there the potential for loss of life due to damages from the watershed impairment?	X		Flooding over roads may prevent emergency vehicles from reaching the community in a timely manner.
Has access to a hospital or medical facility been impaired by watershed impairment?		X	
Has the community as a whole been adversely impacted by the watershed impairment (life and property ceases to operate in a normal capacity)	X		Impacts to watershed pose health threats to community; and excess debris may negatively impact eco-tourism in the community.
Is there a lack or has there been a reduction of public safety due to watershed impairment?	X		Impacts to watershed pose health threats to community by increasing likelihood of insect-born diseases.

Completed By: Brian Baiamonte Date: 3/18/2006

Section 2H Group Representation and Disability Information

This section is completed only for the preferred alternative selected.

Group Representation	Number
American Indian/Alaska Native Female Hispanic	
American Indian/Alaska Native Female Non-Hispanic	
American Indian/Alaska Native Male Hispanic	
American Indian/Alaska Native Male Non-Hispanic	
Asian Female Hispanic	
Asian Female Non-Hispanic	
Asian Male Hispanic	
Asian Male Non-Hispanic	
Black or African American Female Hispanic	
Black or African American Female Non-Hispanic	
Black or African American Male Hispanic	
Black or African American Male Non-Hispanic	
Hawaiian Native/Pacific Islander Female Hispanic	
Hawaiian Native/Pacific Islander Female Non-Hispanic	
Hawaiian Native/Pacific Islander Male Hispanic	
Hawaiian Native/Pacific Islander Male Non-Hispanic	
White Female Hispanic	
White Female Non-Hispanic	6
White Male Hispanic	
White Male Non-Hispanic	6
Total Group	12

Census Tract 9702, Blocks 3009, 3019.

Completed By: Brian Baiamonte Date: 3/18/2006

Section 2I. Required consultation or coordination between the lead agency and/or the RFO and another governmental unit including tribes:

Easements, permissions, or permits:

Sponsor will secured all relevant easements needed to commence emergency work.
Sponsor shall obtain a CWA, Water Quality Certification, and CZMA permit.

CWA Permit required by US Army COE
Clean Water Act Certification by LA DEQ
Coastal Use Permit required by LA DNR

Mitigation Description:

Access to channel shall be from one side of the channel. Debris shall be disposed of in an approved landfill. Sediment will be disposed of using the existing spoil bank to the maximum extent possible. Project will be completed in a timely manner to reduce impact to community. Project area will be restored to pre-storm conditions. Project will decrease the likelihood of insect-born disease by restoring pre-storm flow conditions to the channel.

Agencies, persons, and references consulted, or to be consulted:

US Army COE
LA Department of Natural Resources
LA Department of Environmental Quality
LA Department of Wildlife and Fisheries (CONSULTATION ONLY)
US Fish and Wildlife Service (CONSULTATION ONLY)

Section 4 NRCS EWP Funding Priority

Complete the following section to compute the funding priority for the recovery measures in this application
(see instructions on page 10).

Priority Ranking Criteria	**Yes**	**No**		**Ranking Number Plus Modifier**
1. Is this an exigency situation?				
2. Is this a site where there is serious, but not immediate threat to human life?	X			2 - d, e
3. Is this a site where buildings, utilities, or other important infrastructure components are threatened?				
4. Is this site a funding priority established by the NRCS Chief?				
The following are modifiers for the above criteria			**Modifier**	
a. Will the proposed action or alternatives protect or conserve federally-listed threatened and endangered species or critical habitat?			No	
b. Will the proposed action or alternatives protect or conserve cultural sites listed on the National Register of Historic Places?			No	
c. Will the proposed action or alternatives protect or conserve prime or important farmland?			No	
d. Will the proposed action or alternatives protect or conserve existing wetlands?			Yes	
e. Will the proposed action or alternatives maintain or improve current water quality conditions?			Yes	
f. Will the proposed action or alternatives protect or conserve unique habitat, including but not limited to, areas inhabited by State-listed species, fish and wildlife management area, or State identified sensitive habitats?			No	

Enter priority computation in Section 1A, NRCS Entry, Funding priority number.

Remarks:

Section 5A Findings

Finding: Indicate the preferred alternative from Section 2 (Enter to Section 1E): Remove storm deposited sediment and debris from channel and within 15 foot right-of-way of channel, accessing from one side of the channel. Sediment will be disposed of using the previously established spoil bank on the east side of the channel to the maximum extent possible. Debris will be disposed of in an approve landfill.

I have considered the effects of the action and the alternatives on the Environmental Economic, Social; the Special Environmental Concerns; and the extraordinary circumstances (40 CFR 1508.27). I find for the reasons stated below, that the preferred alternative:

_X_ Has been sufficiently analyzed in the EWP PEIS (reference all that apply)
Chapter 5.2.2.1.2
Chapter _____
Chapter _____
Chapter _____
Chapter _____

____ May require the preparation of an environmental assessment or environmental impact statement. The action will be referred to the NRCS State Office on this date:

NRCS representative of the DSR team Charles D Stuckey

Title: ~~Brian A. Baumgartner~~ District Conservationist Date: ~~03/18/2006~~ 4/21/06

Section 5B Comments:

Section 5C **Sponsor Concurrence:** _____

Sponsor Representative

Title: Chairman · CPGDD #3 Date: 4-21-06

Section 6 Attachments:

A. Location Map
B. Site Plan or Sketches
C. Other (explain)

EMERGENCY REPAIR
BUILT UNDER THE
EMERGENCY WATERSHED PROTECTION PROGRAM
BY GRAVITY DRAINAGE DISTRICT NO.3
WITH THE ASSISTANCE OF THE
NATURAL RESOURCES CONSERVATION SERVICE
OF THE
UNITED STATES DEPARTMENT OF AGRICULTURE
2006

MAPS COPYRIGHT THE ROADS OF LOUISIAIA, SHEARER PUBLISHING

VICINITY MAP

CAMERON PARISH - EWP

DSR# 023-05-016R

10000 0 10000 20000 30000 40000

SCALE IN FEET

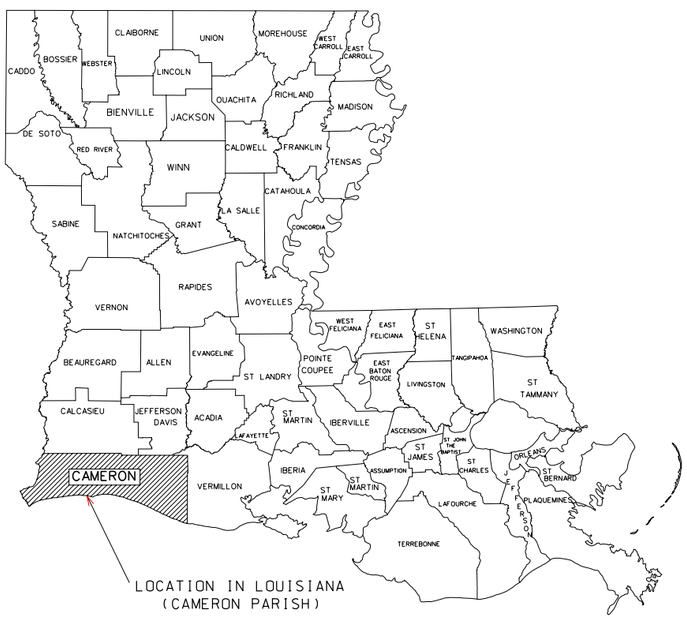

INDEX OF DRAWINGS

1 COVER SHEET - VICINTY MAP
2 PROJECT LOCATION MAP & PROFILE
3 TYPICAL-CHANNEL DEBRIS/SEDIENT REMOVAL
4 SECTIONS-WP-178 LATERAL STATION 0+00 & 1+43
5 SECTIONS-WP-178 LATERAL STATION 3+32 & 6+89

REVISIONS			
NO.	DATE	APPROVED	TITLE

		DATE
DESIGNED	B.STICKER	05/06
DRAWN	G. BURNS	05/06
CHECKED	B.STICKER	05/06
APPROVED		

COVER SHEET - VICINITY MAP
CHANNEL DEBRIS AND SEDIMENT REMOVAL
WP-187 LATERAL
DSR-023-05-016R
CAMERON PARISH, LOUISIANA

NRCS
Natural Resources Conservation Service
United States Department of Agriculture

FILE NAME
LA EWP

DRAWING NAME
023-05-016R01

SHEET 1 OF 5

...\Drawings\023-05-016R-001.dgn 7/8/2006 9:57:21 AM

PROJECT PLAN MAP - WP-187 LATERAL
DSR 023-05-016R CAMERON PARISH

30 0 30 60 90 120
SCALE IN FEET

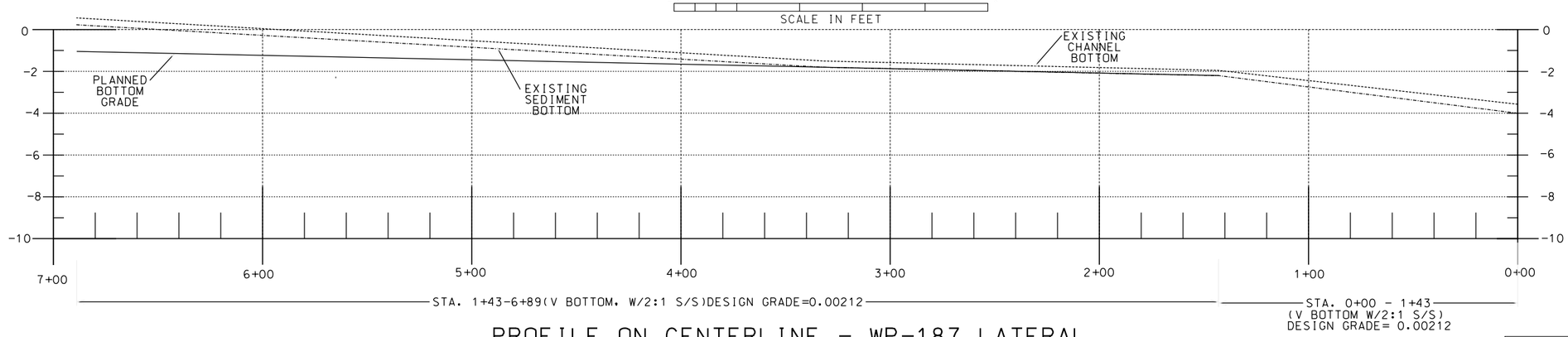

PROFILE ON CENTERLINE - WP-187 LATERAL
DSR 023-05-016R CAMERON PARISH

REVISIONS			
NO.	DATE	APPROVED	TITLE

X-SECTIONS
CHANNEL DEBRIS AND SEDIMENT REMOVAL
DSR-023-05-016R
WP-187 LATERAL
CAMERON PARISH, LOUISIANA

		DATE
DESIGNED	D.MARTIN	04/06
DRAWN	G. BURNS	04/06
CHECKED	B.STICKER	04/06
APPROVED	D. Martin & C. LAFLEUR	

NRCS
Natural Resources Conservation Service
United States Department of Agriculture

FILE NAME
LA -EWP

DRAWING NAME
023-05-016R02

SHEET 2 OF 5

...\Drawings\023-05-016R-02.dgn 7/8/2006 10:05:45 AM

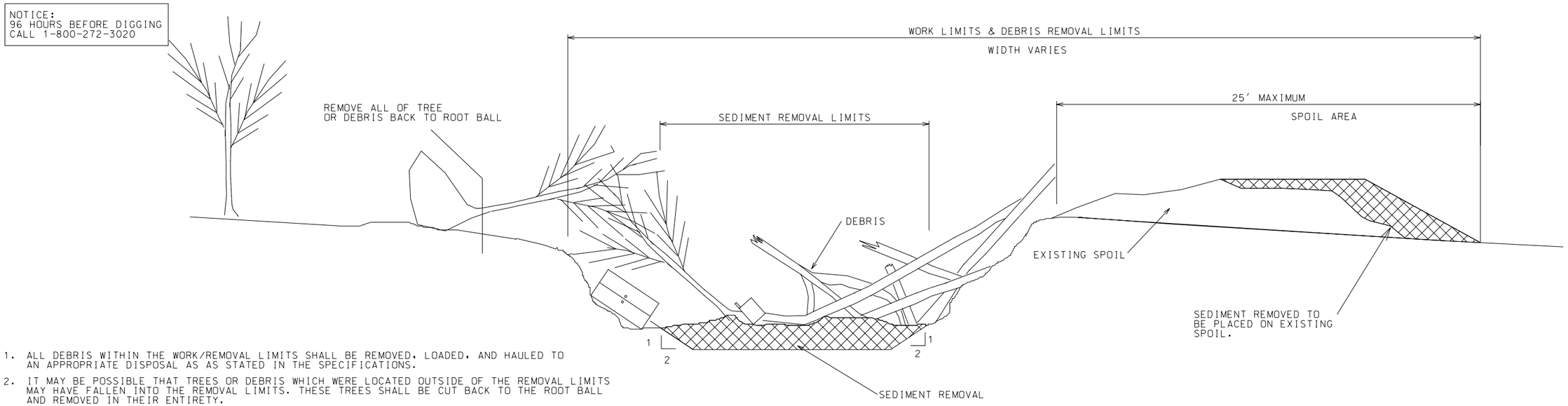

1. ALL DEBRIS WITHIN THE WORK/REMOVAL LIMITS SHALL BE REMOVED, LOADED, AND HAULED TO AN APPROPRIATE DISPOSAL AS AS STATED IN THE SPECIFICATIONS.
2. IT MAY BE POSSIBLE THAT TREES OR DEBRIS WHICH WERE LOCATED OUTSIDE OF THE REMOVAL LIMITS MAY HAVE FALLEN INTO THE REMOVAL LIMITS. THESE TREES SHALL BE CUT BACK TO THE ROOT BALL AND REMOVED IN THEIR ENTIRETY.
3. WORK ONLY SIDE OF CHANNEL WITH EXISTING SPOIL BANK UNLESS OTHERWISE CONCURRED IN BY COTR. SPOIL RESULTING FROM THE SEDIMENT REMOVAL SHALL BE PLACED ON THE SIDE OF THE CHANNEL WITH THE EXISTING SPOIL BANK AS SHOWN.
4. CLEARING OF UNDAMAGED WOODY VEGETATION ON THE EXISTING SPOIL SHALL BE LIMITED TO ONLY THAT IS NECESSARY FOR PLACEMENT OF THE REMOVED SEDIMENT.

TYPICAL CHANNEL DEBRIS/SEDIMENT REMOVAL

WP-178 LATERAL
N.T.S

	DATE
DESIGNED D.MARTIN	03/06
DRAWN G.BURNS	04/06
CHECKED B.STICKER	04/06
APPROVED	

TYPICAL-CHANNEL DEBRIS/SEDIMENT REMOVAL
WP-187 LATERAL
DSR# 023-05-016R
CAMERON PARISH, LOUISIANA

NRCS
Natural Resources Conservation Service
United States Department of Agriculture

FILE NAME
LA-EWP-2006

DRAWING NAME
023-05-016R03

REVISIONS

NO.	DATE	APPROVED	TITLE

SHEET 3 OF 5

...\Drawings\023-05-016R-03.dgn 7/8/2006 10:08:28 AM

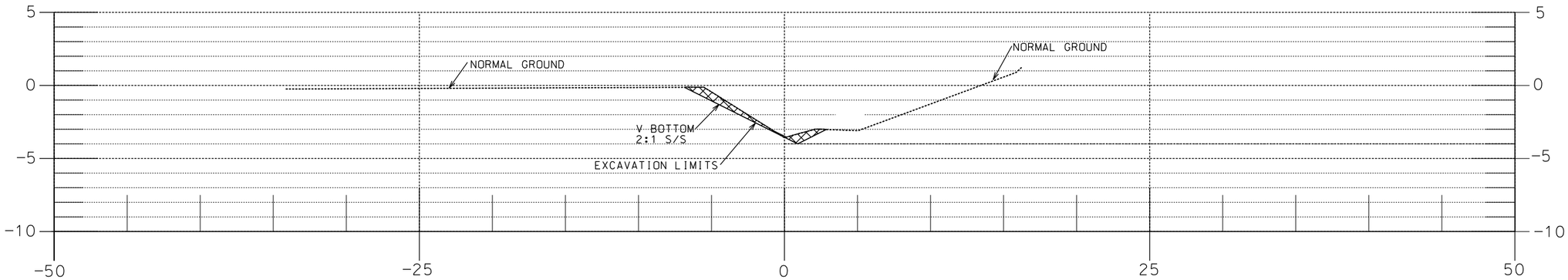

STA. 0+00 - WP-187 LATERAL
DSR 023-05-016R - CAMERON PARISH

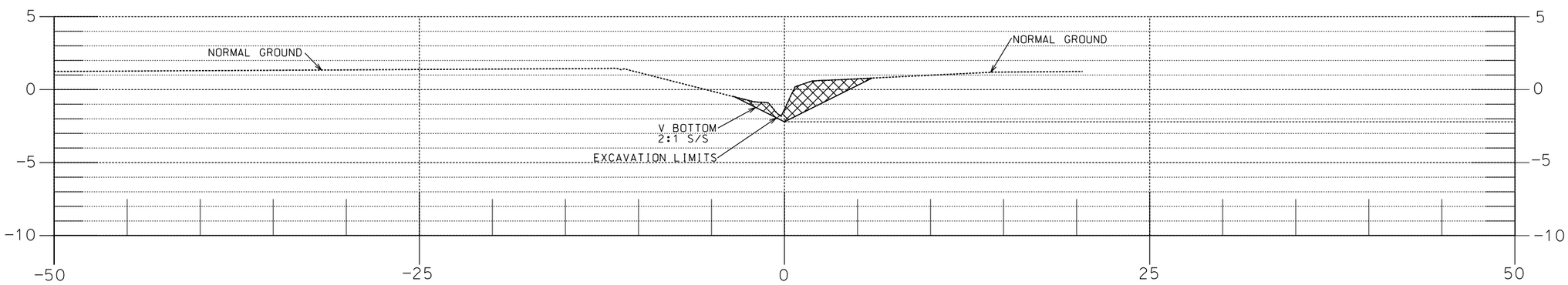

STA. 1+43 - WP-178 LATERAL
DSR 023-05-016R - CAMERON PARISH

REVISIONS			
NO.	DATE	APPROVED	TITLE

	DATE
DESIGNED D.MARTIN	03/06
DRAWN G.BURNS	04/06
CHECKED B.STICKER	04/06
APPROVED	

X-SECTIONS
CHANNEL DEBRIS AND SEDIMENT REMOVAL
WP-178 LATERAL
STA. 0+00 & STA. 1+43
CAMERON PARISH, LOUISIANA

NRCS
Natural Resources Conservation Service
United States Department of Agriculture

FILE NAME
LA -EWP

DRAWING NAME
023-05-016R04

SHEET 4 OF 5

...\Drawings\023-05-016R-04.dgn 7/8/2006 10:10:09 AM

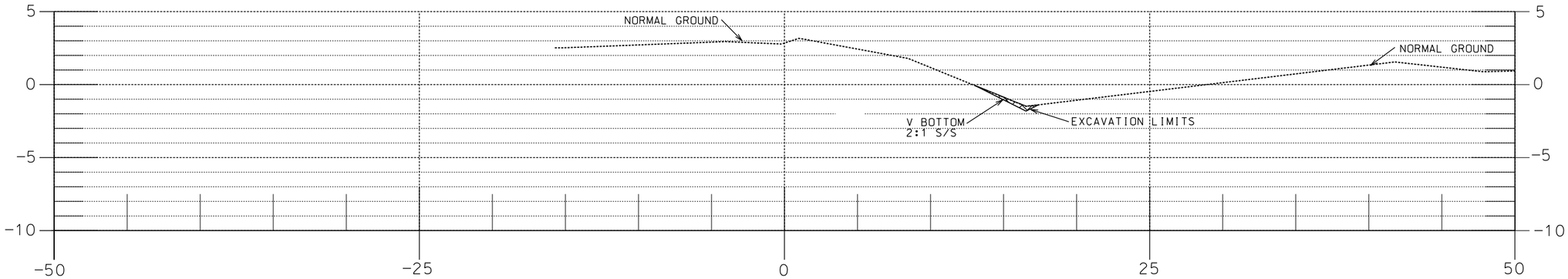

STA. 3+32 - WP-187 LATERAL
DSR 023-05-016R - CAMERON PARISH

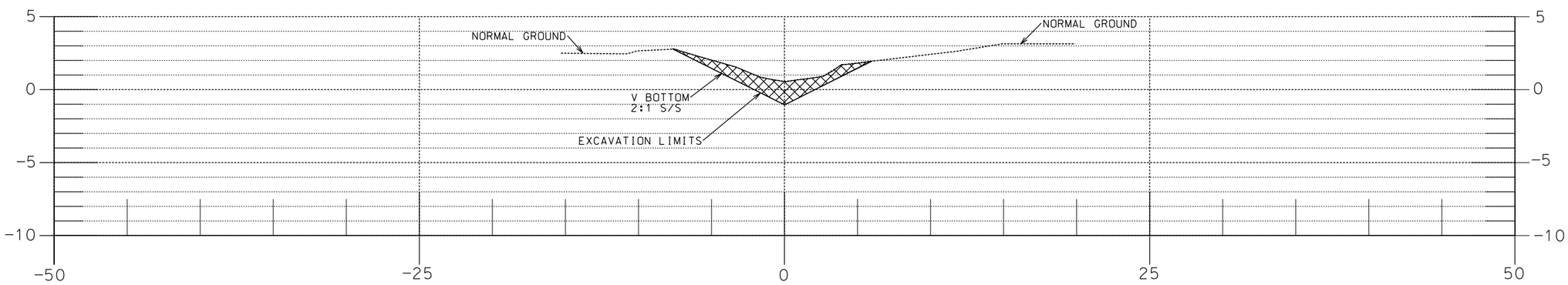

STA. 6+89 - WP-178 LATERAL
DSR 023-05-016R - CAMERON PARISH

REVISIONS			
NO.	DATE	APPROVED	TITLE

		DATE
DESIGNED	D.MARTIN	03/06
DRAWN	G.BURNS	04/06
CHECKED	B.STICKER	04/06
APPROVED		

X-SECTIONS
CHANNEL DEBRIS AND SEDIMENT REMOVAL
WP-178 LATERAL
STA. 3+32 & STA. 6+89
CAMERON PARISH, LOUISIANA

NRCS
Natural Resources Conservation Service
United States Department of Agriculture

FILE NAME
LA -EWP

DRAWING NAME
023-05-016R05

SHEET 5 OF 5

...\Drawings\023-05-016R-05.dgn 7/8/2006 10:11:47 AM

DSR 023-05-016R
Channel WP 187
Cameron Parish

CONSTRUCTION SPECIFICATIONS

NUMBER	TITLE	PAGE	THROUGH
5	Pollution Control	5-1	5-4
6	Seeding, Sprigging and Mulching	6-1	6-5
7	Construction Surveys	7-1	7-5
8	Mobilization and Demobilization	8-1	8-2
9	Traffic Control	9-1	9-4
202	Channel Excavation, Sediment Removal	202-1	204-4
203	Channel Obstruction Removal	203-1	203-5

DRAWINGS	1 of 5	5 of 5
SPECIAL PROVISIONS	1 of 1	1 of 1

SPECIAL PROVISIONS

1. Not all pipelines and other utilities are shown on the plans. It is the responsibility of the contractor to contact **Louisiana One Call at 1-800-272-3020** and the appropriate owner of any utility within the work area to assist him/her in the location of unmarked utilities prior to the start of his/her work. **The contractor shall provide the COTR the Louisiana One Call ticket number prior to the start of any excavation activities.**

2. When performing work in the vicinity of utilities and/or other structures the contractor shall take extreme care not to damage said utilities and/or structures. Any damages resulting from improper construction will be the responsibility of the contractor, and repairs of such damages will be made by the contractor at his/her expense. The contractor shall further restore at his/her own expense all injured property caused by any negligent act of omission or commission on his/ her part or on the part of his/her agent, including sidewalks, curbing, sodding, shrubs, pipes, conduits, sewers, buildings, fences, property boundary markers, bridges, retaining walls, tanks, power lines, levees or any other building or private property to a condition as good as it was when he/she entered upon the right of way.

3. The convenience of the general public and of residents along the work shall be provided for in a reasonably adequate and satisfactory manner. Where existing roads are not available for use as detours, all traffic shall be permitted to pass through the work. In such cases the vehicles of the traveling public shall have precedence over the contractor's vehicles to the end that the traveling public's vehicles shall not be unduly delayed for the convenience of the contractor. The contractor shall provide and station competent flagmen whose sole duties shall consist of directing and controlling the movement of public traffic either through or around the work. A flagman shall also be stationed wherever equipment, trucks, etc., enter or leave a thoroughfare from the construction area. The design and application of all signals, pavement markings, channelizing devices and warning sign shall conform the " Louisiana Manual on Uniform Traffic Control Devices", 1988 edition, as revised.

4. The contractor shall arrange his/her work so that no undue or prolonged blocking of business establishments or private residences will occur. Material and equipment stored on the right of way and project site shall be so placed, and the work at all times shall be so conducted, as to insure minimum danger and obstruction to the traveling public.

5. When transporting equipment, supplies, and material to and from the construction site, the contractor shall take the most direct route when leaving a major thoroughfare.

6. Fire hydrants shall be accessible at all times to the Fire Department. No materials or other obstructions shall be placed closer to a fire hydrant than permitted by ordinances, rules or regulations. In the absence of such ordinances, rules or regulations, obstructions shall not be placed within fifteen (15) feet of a fire hydrant.

7. Material Certifications shall be provided to the Government Representative for all materials used in this contract prior to installation.

8. The Estimated Quantities shown on the drawings are based on quantities derived from preliminary survey data. Variations in these quantities may be possible when the work is actually performed. However, modification to the contract will not be made for work performed in excess of these Estimated Quantities

Construction Specification 5—Pollution Control

1. Scope

The work consists of installing measures or performing work to control erosion and minimize the production of sediment and other pollutants to water and air from construction activities.

2. Material

All material furnished shall meet the requirements of the material specifications listed in section 8 of this specification.

3. Erosion and sediment control measures and works

The measures and works shall include, but are not limited to, the following:

Staging of earthwork activities—The excavation and moving of soil materials shall be scheduled to minimize the size of areas disturbed and unprotected from erosion for the shortest reasonable time.

Seeding—Seeding to protect disturbed areas shall occur as soon as reasonably possible following completion of that earthwork activity.

Mulching—Mulching to provide temporary protection of the soil surface from erosion.

Diversions—Diversions to divert water from work areas and to collect water from work areas for treatment and safe disposition. They are temporary and shall be removed and the area restored to its near original condition when the diversions are no longer required or when permanent measures are installed.

Stream crossings—Culverts or bridges where equipment must cross streams. They are temporary and shall be removed and the area restored to its near original condition when the crossings are no longer required or when permanent measures are installed.

Sediment basins—Sediment basins collect, settle, and eliminate sediment from eroding areas from impacting properties and streams below the construction site(s). These basins are temporary and shall be removed and the area restored to its original condition when they are no longer required or when permanent measures are installed.

Sediment filters—Straw bale filters or geotextile sediment fences trap sediment from areas of limited runoff. Sediment filters shall be properly anchored to prevent erosion under or around them. These filters are temporary and shall be removed and the area restored to its original condition when they are no longer required or when permanent measures are installed.

Waterways—Waterways for the safe disposal of runoff from fields, diversions, and other structures or measures. These works are temporary and shall be removed and the area restored to its original condition when they are no longer required or when permanent measures are installed.

Other—Additional protection measures as specified in section 8 of this specification or required

by Federal, State, or local government.

4. Chemical pollution

The contractor shall provide watertight tanks or barrels or construct a sump sealed with plastic sheets to dispose of chemical pollutants, such as drained lubricating or transmission fluids, grease, soaps, concrete mixer washwater, or asphalt, produced as a by-product of the construction activities. At the completion of the construction work, sumps shall be removed and the area restored to its original condition as specified in section 8 of this specification. Sump removal shall be conducted without causing pollution.

Sanitary facilities, such as chemical toilets, or septic tanks shall not be located next to live streams, wells, or springs. They shall be located at a distance sufficient to prevent contamination of any water source. At the completion of construction activities, facilities shall be disposed of without causing pollution as specified in section 8 of this specification.

5. Air pollution

The burning of brush or slash and the disposal of other materials shall adhere to state and local regulations.

Fire prevention measures shall be taken to prevent the start or spreading of wildfires that may result from project activities. Firebreaks or guards shall be constructed and maintained at locations shown on the drawings.

All public access or haul roads used by the contractor during construction of the project shall be sprinkled or otherwise treated to fully suppress dust. All dust control methods shall ensure safe construction operations at all times. If chemical dust suppressants are applied, the material shall be a commercially available product specifically designed for dust suppression and the application shall follow manufacturer's requirements and recommendations. A copy of the product data sheet and manufacturer's recommended application procedures shall be provided to the engineer 5 working days before the first application.

6. Maintenance, removal, and restoration

All pollution control measures and temporary works shall be adequately maintained in a functional condition for the duration of the construction period. All temporary measures shall be removed and the site restored to near original condition.

7. Measurement and payment

Method 1—For items of work for which specific unit prices are established in the contract, each item is measured to the nearest unit applicable. Payment for each item is made at the contract unit price for that item. For water or chemical suppressant items used for dust control for which items of work are established in section 8 of this specification, measurement for payment will not include water or chemical suppressants that are used inappropriately or excessive to need. Such payment will constitute full compensation for the completion of the work.

Method 2—For items of work for which lump sum prices are established in the contract, payment is made as the work proceeds and supported by invoices presented by the contractor that reflect actual costs. If the total of all progress payments is less than the lump sum contract price for this item, the balance remaining for this item will be included in the final contract payment. Payment of the lump sum contract price will constitute full compensation for completion of the

work.

Method 3—For items of work for which lump sum prices are established in the contract, payment will be prorated and provided in equal amounts on each monthly progress payment estimate. The number of months used for prorating shall be the number estimated to complete the work as outlined in the contractor's approved construction schedule. The final month's prorate amount will be provided with the final contract payment. Payment as described will constitute full compensation for completion of the work.

All Methods—The following provisions apply to all methods of measurement and payment. Compensation for any item of work described in the contract, but not listed in the bid schedule is included in the payment for the item of work to which it is made subsidiary. Such items, and the items to which they are made subsidiary, are identified in section 8 of this specification.

8. Items of work and construction details

(See next page.)

8. Items of work and construction details

Items of work to be performed in conformance with this specification and the construction details therefor are:

a. Subsidiary Item, Pollution Control

(1) This item shall consist of all work necessary to control erosion and sediment pollution, chemical pollution, water pollution and air pollution during the period of this contract.

(2) The Contractor shall perform the work in a manner that will reduce erosion, minimize sediments and other pollutants to the water and streams and create a minimum of air pollution consistent with standard construction operations.

(3) The contractor shall perform work in such a manner that all Local, State and Federal regulations regarding pollution (i.e. air, water, etc.) are adhered to.

(4) No separate payment will be made for this item. Compensation for this item will be considered as included in the payment for Bid Item 1, Channel Obstruction Removal, and Bid Item 2, Channel Excavation, Sediment Removal.

Construction Specification 6—Seeding, Sprigging, and Mulching

1. Scope

The work consists of preparing the area for treatment; furnishing and placing seed, sprigs, mulch, fertilizer, inoculant, lime, and other soil amendments; and anchoring mulch in designated areas as specified.

2. Material

Seed—All seed shall conform to the current rules and regulations of the state where it is being used and shall be from the latest crop available. It shall meet or exceed the standard for purity and germination listed in section 7.

Seed shall be labeled in accordance with the state laws and the U.S. Department of Agriculture rules and regulations under the Federal Seed Act in effect on the date of invitations for bids. Bag tag figures are evidence of purity and germination. No seed will be accepted with a test date of more than 9 months before the delivery date to the site.

Seed that has become wet, moldy, or otherwise damaged in transit or storage will not be accepted. The percent of noxious weed seed allowable shall be as defined in the current State laws relating to agricultural seeds. Each type of seed shall be delivered in separate sealed containers and fully tagged unless exception is granted in writing by the contracting officer.

Fertilizer—Unless otherwise specified, the fertilizer shall be a commercial grade fertilizer. It shall meet the standard for grade and quality specified by State law. Where fertilizer is furnished from bulk storage, the contractor shall furnish a supplier's certification of analysis and weight. When required by the contract, a representative sample of the fertilizer shall be furnished to the contracting officer for chemical analysis.

Inoculants—The inoculant for treating legume seeds shall be a pure culture of nitrogen-fixing bacteria prepared specifically for the species and shall not be used later than the date indicated on the container or as otherwise specified. A mixing medium, as recommended by the manufacturer, shall be used to bond the inoculant to the seed. Two times the amount of the inoculant recommended by the manufacturer shall be used except four times the amount shall be used when seed is applied using a hydraulic seeder. Seed shall be sown within 24 hours of treatment and shall not remain in the hydraulic seeder longer than 4 hours.

Lime and other soil amendments—Lime shall consist of standard ground agriculture limestone, or approved equivalent. Standard ground agriculture limestone is defined as ground limestone meeting current requirements of the State Department of Agriculture. Other soil amendments shall meet quality criteria and application requirements specified in section 7.

Mulch tackifiers—Asphalt emulsion tackifiers shall conform to the requirements of ASTM D 977, Specification for Emulsified Asphalt. The emulsified asphalt may be rapid setting, medium setting, or slow setting. Nonasphaltic tackifiers required because of environmental considerations shall be as specified in section 7.

Straw mulch material—Straw mulch shall consist of wheat, barley, oat or rye straw, hay, grass cut from native grasses, or other plants as specified in section 7. The mulch material shall be air-

dry, reasonably light in color, and shall not be musty, moldy, caked, or otherwise of low quality. The use of mulch that contains noxious weeds is not permitted. The contractor shall provide a method satisfactory to the contracting officer for determining weight of mulch furnished.

Other mulch materials—Mulching materials, such as wood cellulose fiber mulch, mulch tackifiers, synthetic fiber mulch, netting, and mesh, are other mulching materials that may be required for specialized locations and conditions. These materials, when specified, must be accompanied by the manufacturer's recommendations for methods of application.

3. Seeding mixtures, sod, sprigs, and dates of planting

The application rate per acre for seed mixtures, sprigs, or sod and date of seeding or planting shall be as shown on the plans or as specified in section 7.

4. Seedbed preparation and treatment

Areas to be treated shall be dressed to a smooth, firm surface. On sites where equipment can operate on slopes safely, the seedbed shall be adequately loosened (4 to 6 inches deep) and smoothed. Depending on soil and moisture conditions, disking or cultipacking, or both, may be necessary to properly prepare a seedbed. Where equipment cannot operate safely, the seedbed shall be prepared by hand methods by scarifying to provide a roughened soil surface so that broadcast seed will remain in place.

If seeding is to be accomplished immediately following construction operations, seedbed preparation may not be required except on a compacted, polished, or freshly cut soil surface.

Rocks larger than 6 inches in diameter, trash, weeds, and other debris that will interfere with seeding or maintenance operations shall be removed or disposed of as specified in section 7.

Seedbed preparation shall be discontinued when soil moisture conditions are not suitable for the preparation of a satisfactory seedbed as determined by the contracting officer's technical representative (COTR).

5. Seeding, sprigging, fertilizing, mulching, and stabilizing

All seeding or sprigging operations shall be performed in such a manner that the seed or sprigs are applied in the specified quantities uniformly in the designated areas. The method and rate of seed application shall be as specified in section 7. Unless otherwise specified, seeding or sprigging shall be accomplished within 2 days after final grading is completed and approved.

Fertilizer, lime, and other soil amendments shall be applied as specified in section 7. When specified, the fertilizer and soil amendments shall be thoroughly incorporated into the soil immediately following surface application.

The rate, amount, and kind of mulching or mesh shall be as specified in section 7. Mulches shall be applied uniformly to the designated areas. They shall be applied to areas seeded not later than 2 working days after seeding has been performed. Straw mulch material shall be stabilized within 24 hours of application using a mulch crimper or equivalent anchoring tool or by a suitable tackifier. When the mulch crimper or equivalent anchoring tool is used, it shall have straight blades and be the type manufactured expressly for and capable of firmly punching the mulch into the soil. Where the equipment can be safely operated, it shall be operated on the contour. Hand methods shall be used where equipment cannot safely operate to perform the work required.

The tackifier shall be applied uniformly over the mulch material at the specified rate, or it shall be injected into the mulch material as it is being applied. Mesh or netting stabilizing materials shall be applied smoothly, but loosely on the designated areas. The edges of these materials shall be buried or securely anchored using spikes or staples as specified in section 7.

The contractor shall maintain the mesh or netting areas until all work under the contract has been completed and accepted. Maintenance shall consist of the repair of areas damaged by water erosion, wind, fire, or other causes. Such areas shall be repaired to reestablish the intended condition and to the design lines and grades required by the contract. The areas shall be refertilized, reseeded, and remulched before the new application of the mesh or netting.

6. Measurement and payment

Method 1—For items of work for which specific unit prices are established in the contract, each area treated is measured as specified in section 7 and the area calculated to the nearest 0.1 acre. Payment for treatment is made at the contract unit price for the designated treatment, which will constitute full compensation for completion of the work.

When specified as an item of work, mesh or netting is measured to the nearest square yard of surface area covered and accepted. Payment is made at the contract unit price and will constitute full compensation for completion of the work.

Method 2—For items of work for which specific lump sum prices are established in the contract, the quantity of work will not be measured for payment. Payment for this item is made at the contract lump sum price for the item and will constitute full compensation for the completion of the work.

Method 3—For items of work for which lump sum prices are established in the contract, payment is made as the work proceeds. Progress payments will be determined as specified in section 7. Payment of the lump sum contract price will constitute full compensation for completion of the work.

All Methods—The following provisions apply to all methods of measurement and payment. Compensation for any item of work described in the contract, but not listed in the bid schedule is included in the payment for the item of work to which it is made subsidiary. Such items and the item(s) to which they are made subsidiary are identified in section 7.

7. Items of work and construction details

(See next sheet)

7. Items of work and construction details

Items of work to be performed in conformance with this specification and the construction details therefor are:

Subsidiary Item, Permanent Vegetation Seeding, Fertilization and Mulching

a. Permanent Vegetation Seeding

(1) This item will consist of furnishing and applying seed according to the following specifications:

(2) Seeding for permanent cover will be done on all bare areas such as channel slopes, berms, spoil placement areas, access routes and any other areas distrubed as a result of the debris and sediment removal. Fertilizer and seed will not be applied to areas with perennial ponded water.

(3) No seedbed preparation will be required if the construction equipment has produced a scarified surface and the seeding is done the day the areas to be seeded are worked. If the construction equipment has produced a slick surface, or seeding is not done the day the areas are worked, a seedbed will be prepared by scarifying the soil surface with a spike-tooth harrow or similar implement to a depth of one (1) inch. When more than one species of vegetation is required, each species shall be seeded separately. Permanent vegetation seeding will be applied at the following rates:

Seeding Period	**Species**	**Pure Live Seed (lb./ac)**
Mar 1 - Aug 31	Common Bermuda-grass (hulled)	45
Sep 1 - Dec 31	Tall Fescue	35
Jan 1 - Feb 28	Common Bermuda-grass(unhulled) and Common Bermuda-grass (hulled) and Rye Grass	20 20 25

b. Fertilization

(1) This item will consist of furnishing and applying fertilizer to all areas to be seeded according to the following specifications:

(2) Fertilizer will be a 1-1-1 ratio of N, P, and K, and will contain at least 13 lbs. of each per 100 lbs. of material.

Fertilizer rate (13-13-13 basis)	(14 lbs. per 1000 sq ft) or (600 lbs. per acre)

(1) One application of fertilizer will be applied at the time of planting as directed by the Government Representative.

c. Mulching

(1) No mulching will be required on this contract.

d. No separate payment will be made for this item. Compensation for this item will be considered as included in the payment for Bid Item 1, Channel Obstruction Removal, and Bid Item 2, Channel Excavation, Sediment Removal.

Construction Specification 7—Construction Surveys

1. Scope

The work consists of performing all surveys, measurements, and computations required by this specification.

2. Equipment and material

Equipment for construction surveys shall be of a quality and condition to provide the required accuracy. The equipment shall be maintained in good working order and in proper adjustment at all times. Records of repairs, calibration tests, accuracy checks, and adjustments shall be maintained and be available for inspection by the engineer. Equipment shall be checked, tested, and adjusted as necessary in conformance with manufacturer's recommendations.

Material is field notebooks, stakes, templates, platforms, equipment, spikes, steel pins, tools, and all other items necessary to perform the work specified.

3. Quality of work

All work shall follow recognized professional practice and the standards of the industry unless otherwise specified in section 9 of this specification. The work shall be performed to the accuracy and detail appropriate for the type of job. Notes, sketches, and other data shall be complete, recorded neatly, legible, reproducible and organized to facilitate ease in review and allow reproduction of copies for job documentation. Survey equipment that requires little or no manual recording of field data shall have survey information documented as outlined in section 9 of this specification.

All computations shall be mathematically correct and shall include information to identify the bid item, date, and who performed, checked, and approved the computations. Computations shall be legible, complete, and clearly document the source of all information used including assumptions and measurements collected.

If a computer program is used to perform the computations, the contractor shall provide the engineer with the software identification, vendor's name, version number, and other pertinent data before beginning survey activities. Computer generated computations shall show all input data including values assigned and assumptions made.

The elevations of permanent and temporary bench marks shall be determined and recorded to the nearest 0.01 foot. Differential leveling and transit traverses shall be of such precision that the error of vertical closure in feet shall not exceed plus or minus 0.1 times the square root of the traverse distance in miles. Linear measurements shall be accurate to within 1 foot in 5,000 feet, unless otherwise specified in section 9 of this specification. The angular error of closure for transit traverses shall not exceed 1 minute times the square root of the number of angles turned.

The minimum requirements for placing slope stakes shall be at 100-foot stations for tangents, as little as 25 feet for sharp curves, breaks in the original ground surface and at any other intermediate stations necessary to ensure accurate location for construction layout and measurement. Slope stakes and cross sections shall be perpendicular to the centerline. Significant breaks in grade shall be determined for cross sections. Distances shall be measured horizontally and recorded to the nearest 0.1 foot. Side shots for interim construction stakes may be taken with a hand level.

Unless otherwise specified in section 9 of this specification, measurements for stationing and establishing the location of structures shall be made to the nearest 0.1 foot.

Elevations for concrete work, pipes, and mechanical equipment shall be determined and recorded to the nearest 0.01 foot. Elevations for earth work shall be determined and recorded to the nearest 0.1 foot.

4. Primary control

The baselines and bench marks for primary control, necessary to establish lines and grades needed for construction, are shown on the drawings and have been located on the job site.

These baselines and bench marks shall be used as the origin of all surveys, layouts, and measurements to establish construction lines and grades. The contractor shall take all necessary precautions to prevent the loss or damage of primary control points. Any stakes or control points lost or damaged by construction activity will be reestablished by the contractor or at contractor expense.

5. Construction surveys

Before work starts that requires contractor performed surveys, the contractor shall submit in writing for the engineer's review: the name, qualifications, and experience of the individuals to be assigned to the survey tasks.

***Method 1*—**Contractor performed surveys shall include:

- checking and any supplemental or interim staking
- performing quantity surveys, measurements, and computations for progress payment
- other surveys as described in section 9 of this specification

***Method 2*—**Contractor performed surveys shall consist of all work necessary for:

- establishing line and grade for all work
- setting slope stakes for all work
- checking and any supplemental or interim staking
- establishing final grade stakes
- performing quantity surveys, measurements, and computations for progress payment
- other surveys as described in section 9 of this specification

***Method 3*—**Contractor performed surveys shall consist of all work necessary for:

- establishing line and grade for all work
- setting slope stakes for all work
- checking and any supplemental or interim staking
- establishing final grade stakes
- performing quantity surveys, measurements, and computations for progress payments
- performing original (initial) and final surveys for determinations of final quantities
- other surveys as described in section 9 of this specification.

6. Staking

The construction staking required for the item shall be completed before work on any item starts. Construction staking shall be completed as follows or as otherwise specified in section 9 of this specification:

***Clearing and grubbing*—**The boundary of the area(s) to be cleared and grubbed shall be staked or flagged at a maximum interval of 200 feet, closer if needed, to clearly mark the limits of work. When contractor staking is the basis for determining the area for final payment, all boundary stakes will be reviewed by the engineer before start of this work item.

***Excavation and fill*—**Slope stakes shall be placed at the intersection of the specified slopes and ground line. Slope stakes and the reference stakes for slopes shall be marked with the stationing, required cut or fill, slope ratio, and horizontal distance from the centerline or other control line. The minimum requirements for placing slope stakes is outlined in section 3, Quality of work.

***Structures*—**Centerline and offset reference line stakes for location, alignment, and elevation shall be placed for all structures.

7. Records

All survey data shall be recorded in fully identified standard hard-bound engineering survey field notebooks with consecutively numbered pages. All field notes and printed data shall include the purpose or description of the work, the date the work was performed, weather data, sketches, and the personnel who performed and checked the work. Electronically generated survey data and computations shall be bound, page numbered, and cross referenced in a bound field notebook containing the index for all survey activities. All work shall follow recognized professional practice.

The construction survey records shall be available at all times during the progress of the work for examination and use by the engineer and when requested, copies shall be made available. The original field notebooks and other records shall be provided to and become the property of the owner before final payment and acceptance of all work.

Complete documentation of computations and supporting data for progress payments shall be submitted to the engineer with each invoice for payment as specified in section 9 of the specification. When the contractor is required to conduct initial and final surveys as outlined in section 5, Construction Surveys, notes shall be provided as soon as possible after completion to the engineer for the purpose of determining final payment quantities.

8. Payment

***Method 1*—**For items of work for which lump sum prices are established in the contract, payment is made as the work proceeds, after presentation of correct and accurate invoices by the contractor showing related costs and evidence of the charges of suppliers, subcontractors, and others for supplies furnished and work performed. Invoices for the total amount of the contract price will not be accepted until all surveys are complete and required documentation has been determined complete. If the total of such payments is less than the lump sum contract price for this item, the unpaid balance will be included in the final contract payment. Payment of the lump sum contract price will constitute full compensation for completion of all work under the bid item.

***Method 2*—**For items of work for which lump sum prices are established in the contract, payment is made as the work proceeds with progress payment amounts determined as a percentage of the total work planned as projected from the contractor's approved construction schedule. Payment of the lump sum contract price will constitute full compensation for completion of all work under this bid item.

Payment will not be provided under this item for the purchase price of materials or equipment having a residual value.

Compensation for any item of work described in the contract, but not listed in the bid schedule will be included in the payment for the item of work to which it is made subsidiary. Such items and the item to which they are made subsidiary are identified in section 9 of this specification.

9. Items of work and construction details

9. ITEMS OF WORK AND CONSTRUCTION DETAILS

Items of work to be performed in conformance with this specification and the construction details therefore are:

a. Subsidiary Item, Construction Surveys

(1) This item shall consist of all work necessary by the Contractor to check NRCS provided surveys, perform supplemental or interim staking for the Contractor's own use, perform quantity surveys for measurements and computations for progress payments and any other surveys the Contractor feels are required which are not specifically indicated to be provided by the NRCS.

(2) In Section 5. Construction surveys, Method 2 shall apply. NRCS shall conduct the original and final surveys and make computations for final payment based on the NRCS surveys.

(a) NRCS will provide a hub with benchmark elevation at 1000 foot intervals and channel centerline stakes at 250 foot intervals.

(3) The Contractor shall be responsible for executing the work to the limits, lines, locations and grades established by the NRCS. The Contractor shall also be responsible for maintaining and preserving all stakes and other marks established by the NRCS. The NRCS shall provide, on a one time basis, the limits, lines, locations and grades indicated above.

If such stakes or marks are destroyed by the Contractor through Contractor negligence the Contractor will bear sole responsibility for replacement. The NRCS may replace them and deduct the expense of the replacement from any amounts due or to become due to the Contractor.

(4) The Contractor will be responsible for any surveys of any kind required by the Contractor other than those cited above to be specifically provided by the NRCS. The Contractor shall furnish, at the Contractor's expense, all notebooks, stakes, templates, platforms, equipment, tools, materials, etc., required for Contractor construction surveys.

(5) Persons considered qualified by the NRCS to perform Contractor surveys shall be certified or licensed land surveyors, registered engineers, or construction personnel who are deemed qualified based on previous performance or who can demonstrate through performance that they are capable and qualified to perform any surveys required by the Contractor. The Contractor shall submit in writing to the Contracting Officer for approval resumes, experience or qualification statements and references for the individuals to be assigned Contractor survey responsibilities.

(6) Contractor construction surveys under this specification shall be in accordance with Method 2. Quantity survey cross sections for progress payments by the Contractor shall be taken at intervals not to exceed 250 feet. These cross sections shall be taken at locations which conform with the appropriate typical section.

(7) The Contractor shall notify the NRCS at least 48 hours in advance of any pending surveys to be performed by the Contractor.

(8) The Contractor shall submit two (2) copies of survey data, notes, computations, etc., to the Contracting Officer at least 72 hours in advance of requesting payment for any quantities derived from such surveys. Notes, sketches and other data shall be complete, recorded neatly, legible, reproducible and organized in a manner that will allow interpretation and reproduction of copies for job documentation.

(9) No separate payment will be made for this item. Compensation for this item will be considered as included in the payment for Bid Item 2, Channel Excavation, Sediment Removal.

Construction Specification 8—Mobilization and Demobilization

1. Scope

The work consists of the mobilization and demobilization of the contractor's forces and equipment necessary for performing the work required under the contract. It does not include mobilization and demobilization for specific items of work for which payment is provided elsewhere in the contract. Mobilization will not be considered as work in fulfilling the contract requirements for commencement of work.

2. Equipment and material

Mobilization shall include all activities and associated costs for transportation of contractor's personnel, equipment, and operating supplies to the site; establishment of offices, buildings, and other necessary general facilities for the contractor's operations at the site; premiums paid for performance and payment bonds including coinsurance and reinsurance agreements as applicable; and other items specified in section 4 of this specification.

Demobilization shall include all activities and costs for transportation of personnel, equipment, and supplies not required or included in the contract from the site; including the disassembly, removal, and site cleanup of offices, buildings, and other facilities assembled on the site specifically for this contract.

This work includes mobilization and demobilization required by the contract at the time of award. If additional mobilization and demobilization activities and costs are required during the performance of the contract as a result of changed, deleted, or added items of work for which the contractor is entitled to an adjustment in contract price, compensation for such costs will be included in the price adjustment for the item or items of work changed or added.

3. Payment

Payment will be made as the work proceeds, after presentation of paid invoices or documentation of direct costs by the contractor showing specific mobilization and demobilization costs and supporting evidence of the charges of suppliers, subcontractors, and others. When the total of such payments is less than the lump sum contract price, the balance remaining will be included in the final contract payment. Payment of the lump sum contract price for mobilization and demobilization will constitute full compensation for completion of the work.

Payment will not be made under this item for the purchase costs of materials having a residual value, the purchase costs of materials to be incorporated in the project, or the purchase costs of operating supplies.

4. Items of work and construction details

(See next page.)

4. Items of work and construction details

Items of work to be performed in conformance with this specification and the construction details therefor are:

a. Subsidiary Item, Mobilization and Demobilization

(1) This item shall consist of mobilizing and demobilizing personnel and equipment in preparation to perform the work within the scope of this contract.

(2) This item shall not include transportation of personnel, equipment and operating supplies between and within the work limit areas of this Contract.

(3) Fences, which must be cut or removed for access, shall be repaired or replaced by the Contractor at his/her expense to equal or exceed the quality of fencing that was in place prior to cutting or removal.

(4) Access shall be as shown on the drawings. If alternate routes are obtained by the Contractor, they must be approved by the NRCS prior to use. All access routes shall be restored, by the Contractor, to a condition equal to or better than the condition prior to the commencement of work under this contract.

(5) No separate payment will be made for this item. Compensation for this item will be considered as included in the payment for Bid Item 1, Channel Obstruction Removal and Bid Item 2, Channel Excavation, Sediment Removal.

Construction Specification 9—Traffic Control

1. Scope

The work shall consist of establishing traffic control and maintaining safe, convenient use of public roads and rights-of-way.

2. Traffic and access

The contractor's operations shall cause no unnecessary inconvenience to the public. The public rights-of-way shall be maintained at all times unless interruption is authorized by proper local authority. Contractor's authorized closing or detour plans shall be provided to the engineer for approval.

Safe and adequate access shall be provided and maintained to all public protection devices and to all critical utility control locations. Facility access shall be continuous and unobstructed unless otherwise approved.

3. Storage of equipment and material in public streets

Construction materials and equipment shall not be stored or parked on public streets, roads, or highways. During any material or equipment loading or unloading activities that may temporarily interfere with traffic, an acceptable detour shall be provided for the duration of the activity. Any associated expense for this activity is the responsibility of the contractor.

Excavated material, including suitable material that is intended for adjacent trench backfill or other earth backfill as specified in section 5 of this specification, shall not be stored on public streets, roads, or highways that remain in service for the public. Any waiver of this requirement must be obtained from the proper local authority and approved by the engineer. All excess and unsuitable material shall be removed from the site as soon as possible. Any spillage shall be removed from roadways before they are used by the public.

4. Street closures, detours, and barricades

The contractor shall comply with the requirements of all applicable responsible units of government for closure of any street, road, or highway. The contractor shall provide the required barriers, guards, lights, signs, temporary bridges, and flaggers together with informing the public of any detours and construction hazards by the most suitable means available, such as local newspapers or radio stations. The contractor is also responsible for compliance with additional public safety requirements that may arise during construction. The contractor shall furnish, install, and, upon completion of the work, promptly remove all signs, warning devices, and other materials used in the performance of this work.

Unless otherwise specified, the contractor shall notify, in writing, the fire chief, police chief, county sheriff, state patrol, schools that operate school buses, or any other government official as may be appropriate no less than 7 days before closing, partly closing, or reopening any street, road, or highway.

Unless otherwise specified, the contractor shall furnish to the engineer a written plan showing the proposed method of signing, barricading for traffic control, and safety for street detours and closures.

All temporary detours will be maintained to ensure use of public rights-of-way is provided in a safe manner. This may include dust control, grading, and graveling as required in section 7 of this specification.

5. General and specific references

All signs, signals, barricades, use of flaggers, and other traffic control and public safety devices shall conform to the general requirements set forth in the Manual of Uniform Traffic Control Devices (MUTCD) and the latest edition of *Standard Highway Signs and Standard Alphabets for Highway Signs* and/or OSHA *Construction Industry Standards (29 CFR Part 1926), Subpart G, Signs, Signals, and Barricades* unless otherwise specified in section 7 of this specification.

6. Measurement and payment

For items of work for which specific lump sum prices are established in the contract, payment for the work is made at the contract lump sum price. Progress payments will be made based upon the percentage of estimated total time that traffic control will be required unless otherwise specified in section 7 of this specification. Payment will constitute full compensation for all flaggers, labor, materials, equipment, and all other items necessary and incidental to completion of the work.

Compensation for any item of work described in the contract, but not listed in the bid schedule will be included in the payment for the item of work to which it is made subsidiary. Such items and items to which they are made subsidiary are identified in section 7 of this specification.

7. Items of work and construction details

(See next page.)

7. Items of Work

Items of work to be performed in conformance with this specification are:

a. Subsidiary Item, Traffic Control

(1) This item shall consist of providing the necessary traffic control devices (signs, signals, markings, personnel, etc.) where needed, to allow for the safe and expeditious movement of traffic through and adjacent to the construction area for the completion of this contract.

(2) The contractor, shall have a comprehensive traffic control plan. The plan shall address, as a minimum, the following requirements:

(a) The design and application of all signals, pavement markings, channelizing devices, and warning signs shall conform to the *"Louisiana Manual on Uniform Traffic Control Devices*", 1988 Edition, as revised.

(b) Channelizing and delineation devices shall be used to mark all construction areas. These shall be Type II and/or Type III barricades, and/or barrels, all fully reflectional with lights, and weighted with sandbags.

(c) Any traffic control devices (signs, signals, markings) which exist as part of the normal pre-construction scheme, and that do not apply to an appropriate situation, or are in the way of construction, shall be covered, removed, or relocated by the contractor.

(d) The roadway and all traffic control devices shall be restored to original conditions by the contractor.

(e) All excavations shall be covered, backfilled, or protected, (see “b”, above) at night and when work is not in progress. Excavated pits, etc., shall be fully fenced or barricaded (see “b”, above) to prevent access by pedestrians.

(f) All materials/machines shall be stored outside of the road surface, creating no sight distance problems, and fully delineated as in “b”, above.

(g) If sections of roadway are totally closed, the contractor shall notify the sheriff's traffic division, 911 operators, the fire department, and any major traffic generators (i.e. schools, etc.). A three working day, minimum, advance notice will be required.

(h) On totally closed sections of the roadway, the contractor shall provide access for local traffic only.

(i) The contractor shall check traffic control devices on a daily basis as a minimum when beginning and ending the work day, to insure adherence to the plans and proper adequacy of devices for day and night visibility. On weekends, devices shall be checked a minimum once per day.

(j) Flagman and/or sheriff's control shall be provided as specified by the COTR.

(k) Yellow, high visibility pennant barrier flagging (nylon rope with plastic pennants) shall be strung between Type II barricades and barrels/drums, only as directed by the COTR.

(l) This traffic control device plan indicates general traffic control devices to be used on this project. It is anticipated that conditions will vary depending on the phase under construction and that the arrangement of those devices will be reviewed on a daily basis. Should the contractor have any question as to the arrangement of those devices, the COTR shall be notified to make an inspection of the site.

(m) Contractor shall provide for the movement of pedestrians for the entire length of the contract. As much as possible, the contractor shall not obstruct existing sidewalks, thereby obstructing pedestrian movements. If existing sidewalks must be obstructed, the contractor shall provide for the movement of pedestrians by posting appropriate signing, such as, "Sidewalk Closed-Use Other Side of Street". Signing shall be reflectorized and lighted at night.

(n) Also, where trenches are excavated outside the roadway surface, the contractor shall provide each dwelling at least one accessible crossing of the backfilled trench area, for use by pedestrians.

(o) As much as possible, the contractor shall provide access to area businesses.

(3) No separate payment will be made for this item. Compensation for this item will be considered as included in the payment for Bid Item 1, Channel Obstruction Removal and Bid Item 2, Channel Excavation, Sediment Removal.

Construction Specification 202—Channel Excavation

1. Scope
The work shall consist of the excavation of all materials necessary for the construction of channels and the disposal of all excavated materials.

2. Classification
Channel excavation shall be unclassified and shall include all materials encountered regardless of their nature or the manner in which they are removed.

3. Marking
The limits of the channels to be excavated will be marked by means of stakes, flags, or other suitable methods.

4. Excavation
Channels shall be excavated as closely as practicable to the lines, grades, and cross sections shown on the plans, considering the character of the material and the excavation methods employed. The excavated surfaces shall be reasonably smooth. In no case shall the excavated cross-sectional area of the channel be less than the specified area.

5. Disposal of excavated material
Material excavated from the channel shall be disposed of in the locations and in the manner shown on the drawings or as specified in Section 7 of this specification.

6. Measurement and payment
For items of channel excavation, for which specific unit prices are established in the contract, the volume of excavation will be measured within the specified limits and computed to the nearest cubic yard by the method of average cross-sectional end areas. Regardless of quantities excavated, the measurement for payment will be made to the specified pay limits.

Payment for items of work listed in the bid schedule will be made at the contract unit price. Such payment will constitute full compensation for all labor, materials, equipment, and all other items necessary and incidental to the performance of the work. Compensation for any item of work described in the contract but not listed in the bid schedule will be included in the payment for the item of work to which it is made subsidiary. Such items and the items to which they are made subsidiary are identified in Section 7 of this specification.

Method 1- The pay limits for channel excavation shall be the neat lines and grades shown on the drawings.

Method 2- The pay limits for channel excavation shall be the neat lines and grades shown on the drawings plus an allowable overcut on the channel bottom up to the limits specified in Section 7.

All Methods - The volume of spoil required to be spread will not be measured directly. The volume to be paid for will be considered equal to the volume of required channel excavation from which such spoil resulted.

The volume of spoil required to be hauled will not be measured directly. The volume to be paid for will be considered equal to the volume of required channel excavation from which such spoil resulted.

7. Items of work and construction details

(See next page.)

7. Items of work and construction details

Items of work to be performed in conformance with this specification and the construction details therefor are:

a. Bid Item 2, Channel Excavation, Sediment Removal

(1) This item shall consist of the removal of all sediment caused by Hurricane Rita from within the channels and the placement and dressing of the resulting spoil to the specified limits shown on the drawing or as staked in the field.

Excavation shall start at the lower ends of channels and proceed upstream. Over excavation for equipment access or other reasons will not be permitted.

(2) Minimum ten (10) foot berms shall be left at the ends of spoil banks where side drains (including ditches, drains, canals and streams) enter the channels being excavated and at bridges and culverts.

(3) No material shall be deposited in or allowed to enter any ditch or other watercourse or gaps in existing spoil banks.

The end slopes of spoil at gaps or openings shall be 4:1 or flatter.

All side drains closed for access purposes during the debris and sediment removal operations shall be reopened immediately upon crossing.

(4) It shall be the responsibility of the contractor to clean out through parish road culverts. It shall be the responsibility of the contractor to clean out under parish road bridges to the lines and grades shown on the drawings.

(5) When work is to be done in the vicinity of a conduit, such as a gasline, waterline, or pipeline, or an electrical cable or other utility, it shall be the contractor's responsibility to notify the owners of the time he expects to be doing construction work in the vicinity of their interests. A copy of such notification shall be sent to the Contracting Officer. Such notification shall be made far enough in advance that said interested parties may make all necessary adjustments of utility fixtures and appurtenances within or adjacent to limits of construction.

(6) Clearing for access and placement of spoil resulting from the sediment removal operations shall be limited only to that absolutely necessary for equipment operation and placement and dressing of spoil. All woody materials cleared shall be considered as debris and disposed of in accordance with Construction Specification 203, Channel Obstruction Removal.

Trees and other woody vegetation that must be cleared must be removed so that the remaining stumps extend no higher than 12 inches above the ground surface.

(7) The excavated material shall be deposited at the locations and to the lines and grades shown on the drawings and as staked in the field. The spoil shall be placed, at the time of excavation, in a manner that will provide drainage away from the channel top bank. Care shall be taken when placing and dressing the spoil to minimize damages to existing vegetation.

(8) Dressing of spoil shall be carried on concurrently with the excavation of the adjacent channel.

Spoil shall be bucket dressed so as to provide for a smooth, neat and uniform finish free of depressions or track or wheel ruts.

(9) Trees, stumps and all other debris dug up during excavation shall not be placed within the spoil. This material shall be disposed of in the same manner as disposal of debris in Construction Specification 203, Channel Obstruction Removal.

(10) No separate payment will be made for spoil dressing. Compensation will be included in the payment for Channel Excavation.

(11) Measurement for payment of sediment removal shall be as follows. The volume of sediment within the specified pay limits is measured and computed to the nearest cubic yard by the method of average cross-sectional end areas. Cross-sections for payment shall be taken at 250 foot intervals.

(12) Measurement and payment will be by Method 1. Such payment will constitute full compensation for related subsidiary items, "Pollution Control", "Seeding, Fertilization and Mulching", “Surveys”, “Mobilization”, and “Traffic Control”.

Construction Specification 203—Channel Obstruction Removal

1. Scope

The work shall consist of the cleanup of designated channel areas consisting of the removal and disposal of trees, logs, stumps, brush, tops, rubbish, debris and other items as specified in Section 8 deposited in the channel.

2. Access

Access shall be designated by NRCS unless alternate routes are obtained by the Contractor and approved by NRCS. Some limited mechanized land clearing may be required for alternate access routes. All access routes shall be restored, by the Contractor, to the condition prior to the commencement of work under this contract.

3. Limits of Work

Each end of each reach of the channel and its tributaries designated for obstruction removal will be referenced to identified roads or other structures or landmarks or be marked by the Government Representative by means of stakes, flags, or other suitable markers.

4. Removal

Flow obstructions shall be removed by methods including, but not limited to, sawing, cabling, winching, lifting, or dragging. No excavation for floatation or any other reasons will be allowed.

The following guidelines will be used to determine which trees, stumps, and brush to remove. **The final determination will be made by the Government Representative.**

a. All downed trees, brush, limbs, tops, vines, and other washed-in woody vegetative materials lying completely or partially within the stream banks shall be removed.

b. Undermined or storm damaged trees within or outside the banks which are still standing but likely to fall into the stream shall be removed.

c. Stumps of downed trees within the channel banks shall not be removed unless otherwise noted in Section 8 of this specification.

All building materials, manufactured items, and other loose foreign debris lying completely or partially within the limits of designated areas.

5. Disposal

All material produced from "Channel Obstruction Removal", shall be hauled to the nearest public landfill or disposed of as specified in Section 8 of this specification.

Sediment removed from the watercourses shall be placed and spread as specified in Section 8. No sediment shall be placed on improved property except where directed or allowed by NRCS to fill stump holes, ruts, and other local depressions. Alternate methods of disposal proposed by the Contractor must be approved by NRCS.

Temporary or permanent placement of logs/debris into tributaries, side ditches, floodplains or other defined water entrances to the watercourse being cleaned will not be allowed for any reason. Should the contractor need to cross such water entrances as part of his/her debris

removal operation then the contractor shall bridge such watercourses using temporary bridging materials, such as equipment mats, which will not obstruct the flow of the side drains. Should the contractor need to cross the watercourse being cleaned, the same crossing methods shall be utilized.

6. Special Requirements

Roadways constructed in the work areas shall be kept to the minimum necessary. No grading for equipment to work or benching of the channel sides will be permitted without the concurrence of NRCS.

All saw cuts shall be made parallel to and as close to ground level as the cutting tools will permit, but no higher than 6" – 10" above the ground.

The Contractor shall take reasonable precautions to prevent further damage to the channel and its environment to include channel banks, fishery resources, and undamaged trees. The Contractor shall provide tanks or barrels to be used for off-site disposal of chemical pollutants such as drained lubricating or transmission oils, greases, etc. produced as a by product of this work. Washing, fueling, or servicing of equipment shall be avoided where spillage or wash water can enter the watercourse.

The Contractor shall not operate heavy equipment such as crawler tractors and tracked backhoes within flowing channels. Any operation of heavy equipment within the banks of the watercourse must be approved by NRCS.

The number of channel crossings shall be kept to a minimum. Materials used to form channel crossings shall be removed once the work for the subject reach is completed.

The Contractor shall backfill holes in the channels and channel banks resulting from stump removal **in residential and other landscaped areas.** Backfill shall be the best fill material available from within within fifty (50) feet of the stump hole (excluding the channel). Upon occasion, spoil may not be available. In such cases, suitable fill material as concurred in by the COTR shall be hauled into the site to fill the stump holes. In residential or other landscaped areas, the fill used to backfill the stump holes shall be topsoil. All track or wheel ruts created as a result of the debris removal operations shall be removed by dressing the area or by backfilling as prescribed above for stump holes.

All track or wheel ruts created as a result of the debris removal operations within the removal limits along the channel, access routes, and disposal sites shall be removed by dressing the area or by backfilling as prescribed above for stump holes. Upon completion of dressing operations all these areas shall be seeded in accordance with Specification 6.

Fences which must be cut or removed for access shall be repaired or replaced by the Contractor at his expense to equal or exceed the quality of fencing that was in place prior to cutting or removal.

The Contractor shall take all reasonable precautions to prevent further damage to structures, utilities, or other fixed improvements and shall promptly repair or replace at his expense any such improvements damaged by his operations.

The Contractor shall coordinate with the appropriate road department, the methods and manners of traffic control.

7. Measurement and payment

Payment will be made on a lump sum basis. Such payment shall be considered full compensation for all materials, labor, equipment, tools, seeding and other items necessary and incidental to complete the work.

8. Items of work and construction details

Items of work to be performed in conformance with this specification and the construction details therefore are:

a. Bid Item 1, Channel Obstruction Removal

1) This item shall consist of the removal and disposal of all obstructions such as trees, limbs, building materials, metal, cars, ATV's, white goods, etc. deposited by Hurricane Rita from within the specified limits shown on the drawing or as staked in the field and those major obstructions which could cause upstream flooding from within the specified limits shown on the drawing or as staked in the field.

2) **No dozers larger than D-4, or equivalent, or log skidders of any size, shall be allowed to be used. Dozers shall only be allowed to do seedbed preparation as required and as concurred in by the COTR. No equipment in excess of 30,000 lbs. or 9 ft. in width shall be allowed.**

3) The lateral work limits shall be as shown on the drawings. The beginning and ending work limits are as shown on the "Site Location Maps". When debris removal is required at bridge and culvert locations, the work limits shall be the distance necessary to remove all floating and submerged accumulated debris. At bridges and culverts, both sides of the channel may be used as work sides if conditions warrant.

4) All woody debris within the work limits shall be removed. In landscaped residential areas, vegetative debris longer than 18 inches or having a diameter greater than 2 inches within the work limits shall be removed. All other areas vegetative debris longer than 18 inches and a diameter greater than 2 inches within the work limits shall be removed. This is to include, but is not limited to all debris (trees, root balls which have been displaced, etc.) that is a part of the debris within the work limits. Leaning trees, (those which are leaning over the channel and are identified for removal), shall be cut off at the ground line leaving the root mass in place. If any part of a downed or leaning tree is within the lateral work limits, the entire tree shall be removed. If the root mass of such tree is outside the work limits, the tree shall be cut off at the root mass and the root mass shall remain, with the exception of root masses in residential yards which shall be removed as per the following stipulations as concurred in by the COTR. The root mass of any tree, within the work limits, designated for removal, shall only be left in place if 50% or more of the root mass is still in direct contact with the soil. Root masses of trees, within the work limits, that are designated for removal and which are less than 50% in contact with the soil shall be removed, unless in the opinion of the COTR the removal of such root mass would cause a potentially erosive condition. Any hanging tree tops or limbs within the work limits shall be removed and disposed of. The contractor shall take care to not to damage any existing trees; however if any trees are damaged by the debris removal operations, they shall be removed and disposed of as concurred in by the COTR.

5) No materials considered debris as described will be allowed to be placed in the spoil resulting from the removal of sediment. Any debris encountered as a result of the sediment removal shall be disposed of as prescribed within this specification.

6) All vegetative debris (trees) and building materials other than white goods removed from

within the work limits shall be disposed of by removal from the work location, loading, and hauling to an approved CD disposal site. The contractor shall provide to the Contracting Officer the intended location for disposal of this debris prior to the start of work. The contractor is responsible for payment of any tipping fees associated with the disposal.

7) All debris removed from the reach such that is not acceptable to be disposed of at a CD approved facility, such as white goods, shall be disposed of by loading and hauling to any federal, state or locally approved public landfill. The contractor shall provide to the Contracting Officer the intended location for disposal of this debris prior to the start of work. The contractor is responsible for payment of any tipping fees.

8) The contractor is responsible for any debris, which his operation may dislodge and cause to float downstream of the work area.

9) **Any hazardous material** encountered, such as batteries, used motor oil, scrap tires, white goods, any item which could contain CFC's, etc., shall be loaded and hauled to an approved hazard waste disposal site.

10) **The contractor shall, upon approval from the land owners, create access barriers at ingress and egress points and at locations and frequencies concurred in by the COTR, using some of the logs removed in the obstruction removal operation.**

11) Payment will be as specified in Section 7 of this specification. Such payment will constitute full compensation for related subsidiary items, "Pollution Control" and "Seeding, Fertilization and Mulching", "Mobilization" and "Traffic Control"