EMERGENCY REPAIR
TERREBONNE PARISH
BUILT UNDER THE
EMERGENCY WATERSHED PROTECTION PROGRAM
BY TERREBONNE PARISH
WITH THE ASSISTANCE OF THE
NATURAL RESOURCES CONSERVATION SERVICE
OF THE
UNITED STATES DEPARTMENT OF AGRICULTURE
2005

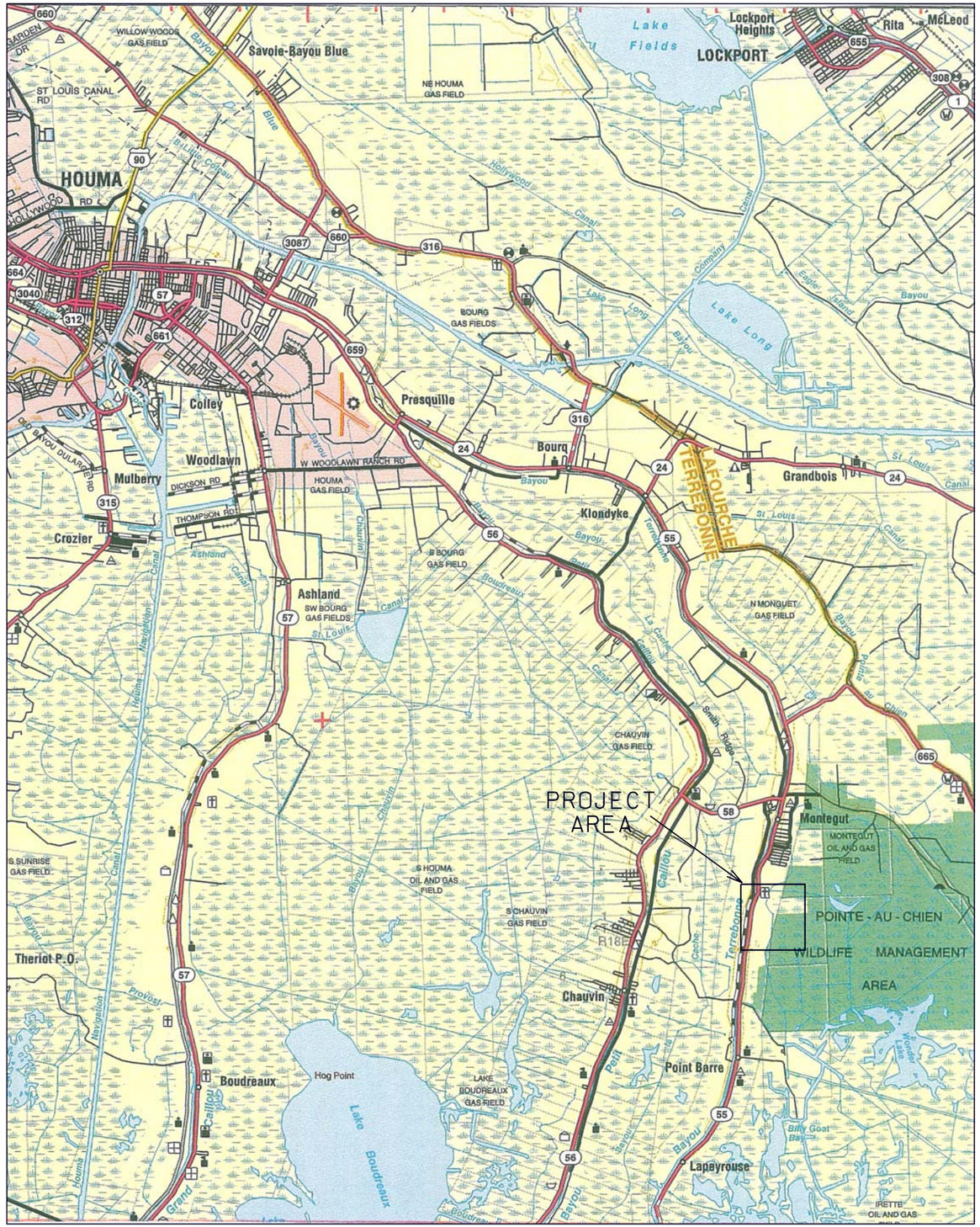

VICINITY MAP

5000 0 5000 10000 15000 20000

SCALE IN FEET

MAPS COPYRIGHT "THE ROADS OF LOUISIANA", SHEARER PUBLISHING

N

INDEX TO DRAWINGS

SHEET NO.	DESCRIPTION
1	COVER SHEET
2	PROJECT PLAN MAP
3	ALTERNATIVE ROUTE MAP
4	PLAN & PROFILE - EARTHEN LEVEE
5-7	CROSS SECTIONS - EARTHEN LEVEE
8	PLAN MAP - SHEET PILE WALL & CHANNEL RESTORATION
9-12	CROSS SECTIONS- SHEET PILE WALL
13	SHEET PILE DETAILS

LOCATION IN LOUISIANA
TERREBONNE PARISH

		DATE
DESIGNED	C. LAFLEUR	10/05
DRAWN	A.J. GREMILLION	10/05
CHECKED		
APPROVED		

COVER SHEET
MONTEGUT LEVEE REPAIR
DSR# 109-05-001R
TERRBONNE PARISH, LOUISIANA

NRCS
Natural Resources Conservation Service
United States Department of Agriculture

FILE NAME
MONTEGUT LEVEE

DRAWING NAME
DSR#109-05-001R

SHEET 01 of 13

...\cover sheet dsr#109-05-001r.dgn 10/11/2005 4:38:46 PM

PROJECT MAP
MONTEGUT LEVEE REPAIR

200 0 200 400 600 800
SCALE IN FEET

		Date
Designed	C. LAFLEUR	10/05
Drawn	A.J. GREMILLION	10/05
Checked		
Approved		

PROJECT PLAN MAP
DSR # 109-05-001R
MONTEGUT LEVEE REPAIR
TERREBONNE PARISH, LOUISIANA

NRCS
Natural Resources Conservation Service
United States Department of Agriculture

File Name
MONTEGUT LEVEE

Drawing Name
DSR#109-05-001R

Sheet 02 of 13

...\Drawings\project map two.dgn 10/11/2005 4:40:32 PM

Sheet 03 of 13

Drawing Name DSR # 109-05-001R

File Name MONTEGUT LEVEE

NRCS
Natural Resources Conservation Service
United States Department of Agriculture

ALTERNATIVE ROUTE MAP
MONTEGUT LEVEE REPAIR
DSR # 109-05-001R
TERREBONNE PARISH, LOUISIANA

		Date
Designed	C. LAFLEUR	10/05
Drawn	A.J. GREMILLION	10/05
Checked		
Approved		

...\ALTERNATIVE ROUTE MAP.dgn 10/11/2005 4:43:04 PM

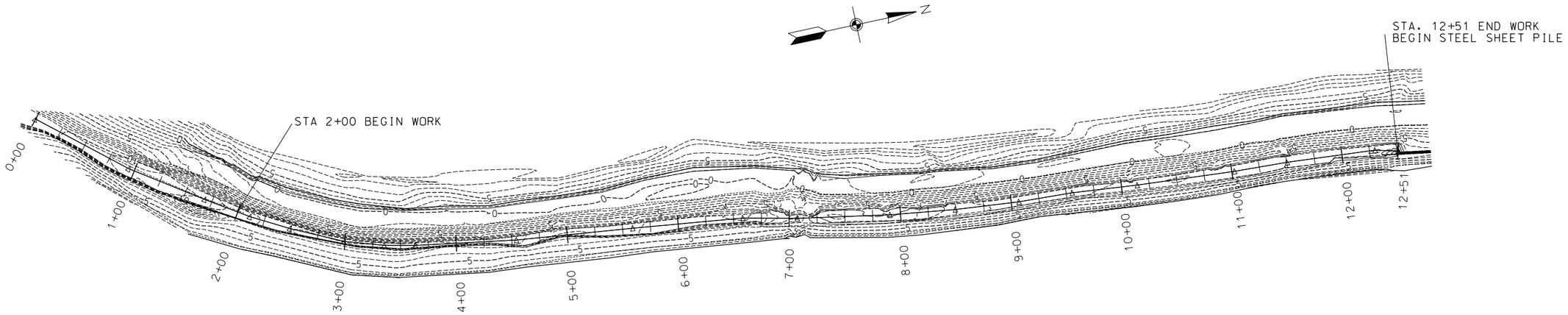

PLAN VIEW
EARTHEN LEVEE REPAIR

MONTEGUT LEVEE - DSR# 109-05-001R

50 0 50 100 150 200
SCALE IN FEET

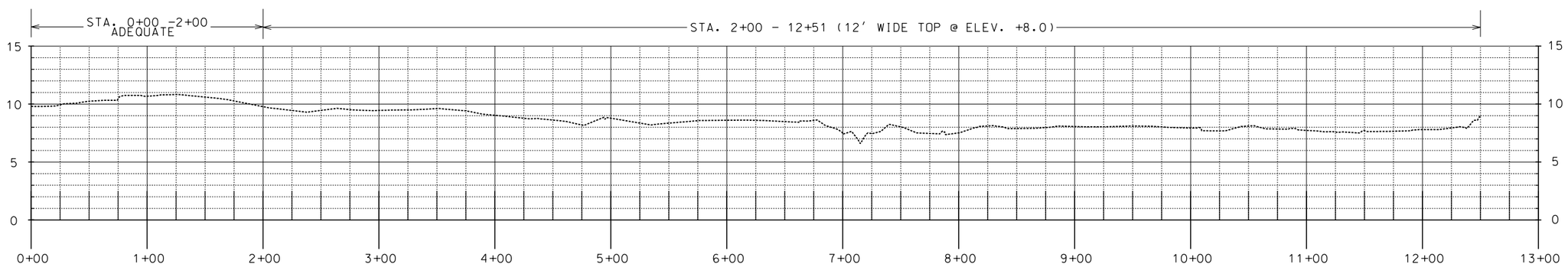

PROFILE ON CENTERLINE
EARTHEN LEVEE REPAIR

MONTEGUT LEVEE - DSR# 109-05-001R

ESTIMATED QUANTITES	
EARTHFILL	1710 cy

HORIZONTAL DATUM: NAD 83, LOUISIANA STATE COORDINATE SYSTEM, SOUTH ZONE
VERTICAL DATUM: NAVD88

		Date
Designed	C. LAFLEUR	10/05
Drawn	A.J. GREMILLION	10/05
Checked		
Approved		

PLAN & PROFILE-EARTHEN LEVEE
DSR # 109-05-001R
MONTEGUT LEVEE REPAIR
TERREBONNE PARISH, LOUISIANA

NRCS
Natural Resources Conservation Service
United States Department of Agriculture

File Name
MONTEGUT LEVEE

Drawing Name
DSR#109-05-001R

Sheet 04 of 13

...\WORKING MODEL DSR 109-05-001R.dgn 10/14/2005 12:56:44 PM

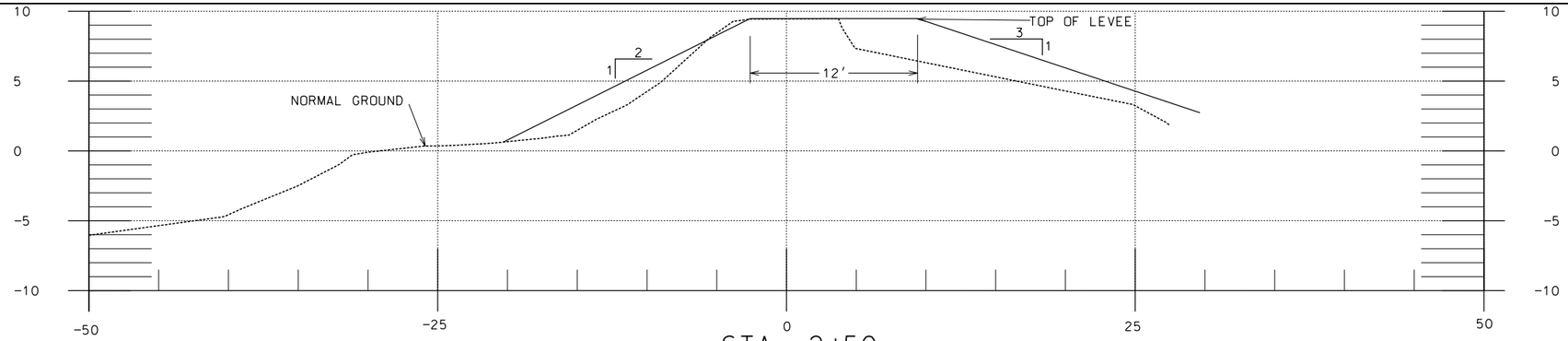

STA. 2+50

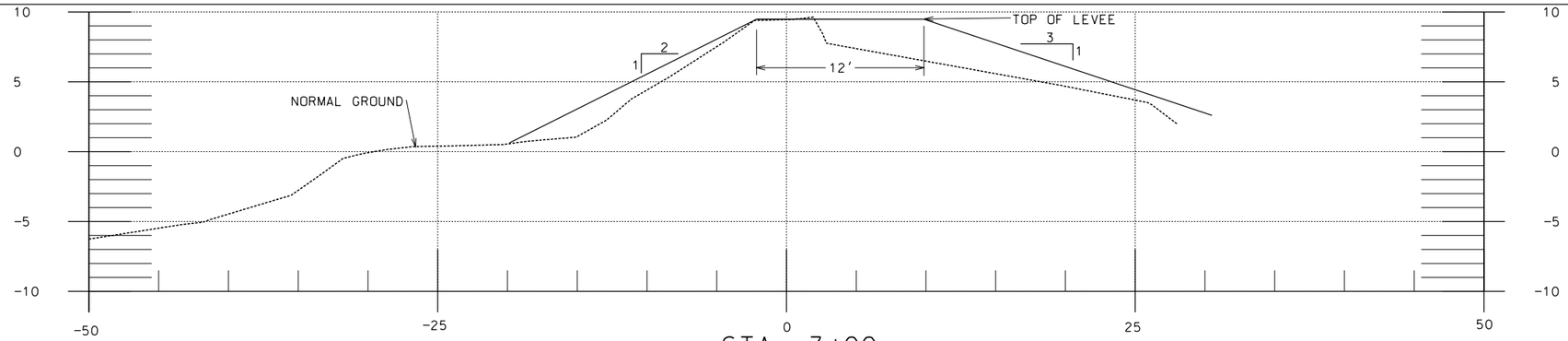

STA. 3+00

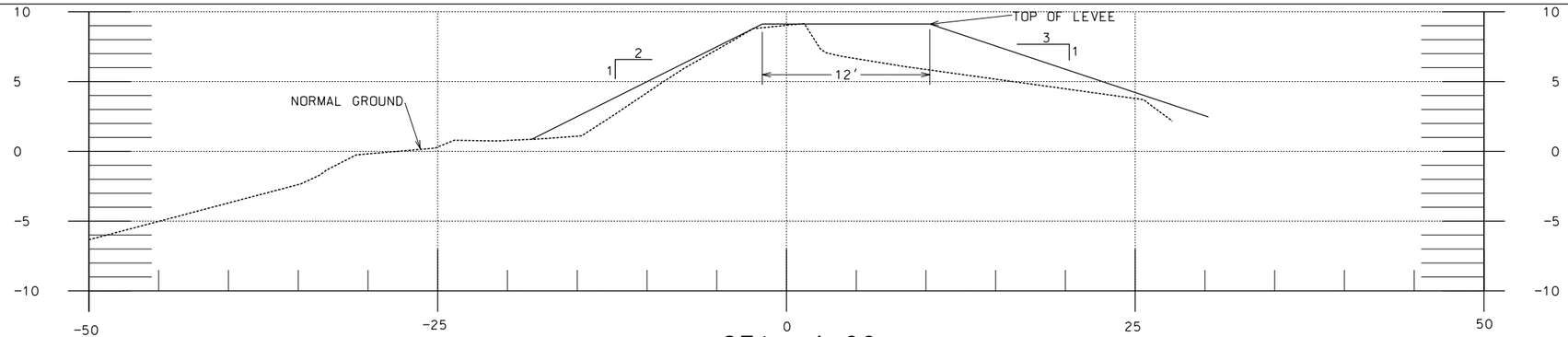

STA. 4+00

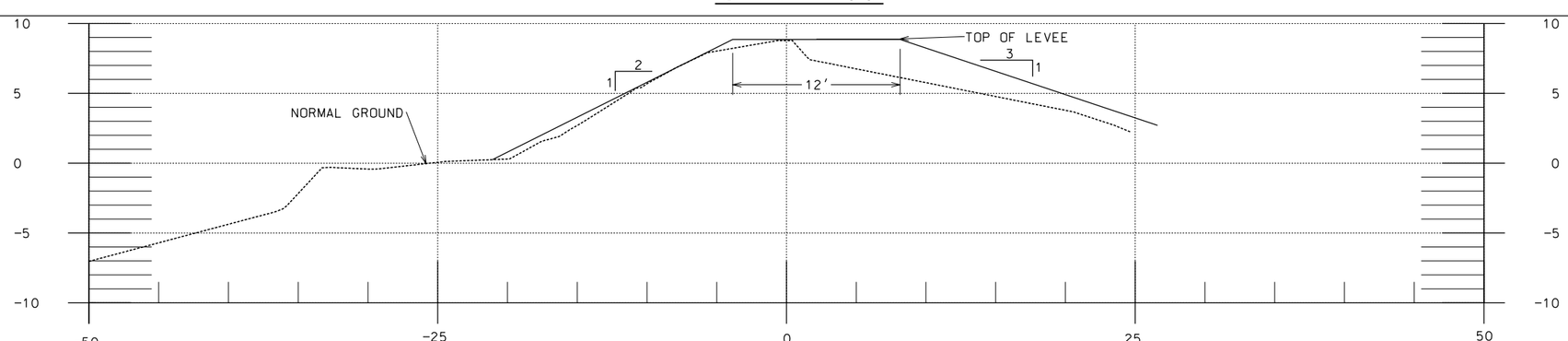

STA. 5+00

HORIZONTAL DATUM: NAD 83, LOUISIANA STATE COORDINATE SYSTEM, SOUTH ZONE
VERTICAL DATUM: NAVD88

...\WORKING MODEL DSR 109-05-001R.dgn 10/11/2005 4:32:37 PM

		Date
Designed	C. LAFLEUR	10/05
Drawn	A.J. GREMILLION	10/05
Checked		
Approved		

CROSS SECTIONS - EARTHEN LEVEE
DSR # 109-05-001R
MONTEGUT LEVEE REPAIR
TERREBONNE PARISH, LOUISIANA

NRCS
Natural Resources Conservation Service
United States Department of Agriculture

File Name
MONTEGUT LEVEE

Drawing Name
DSR#109-05-001R

Sheet 05 of 13

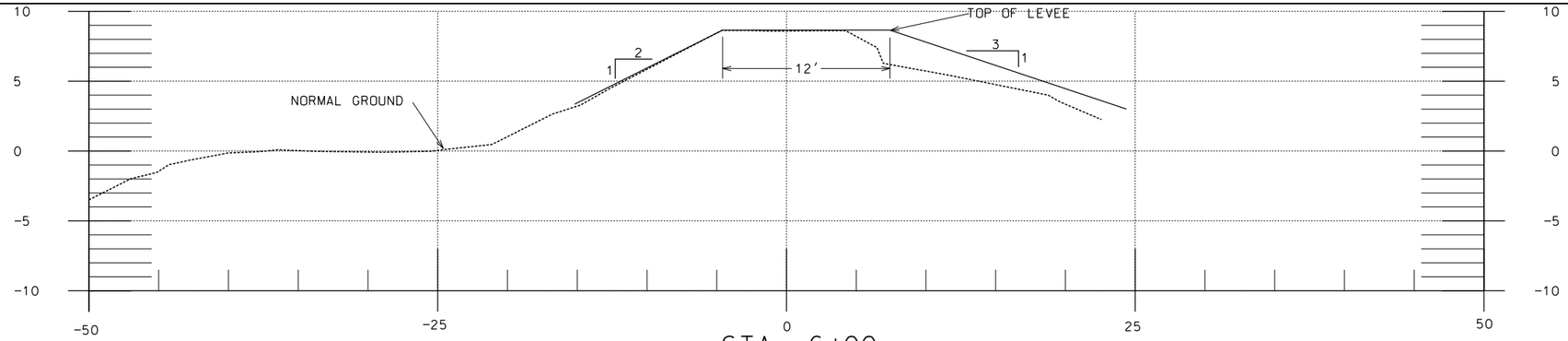

STA. 6+00

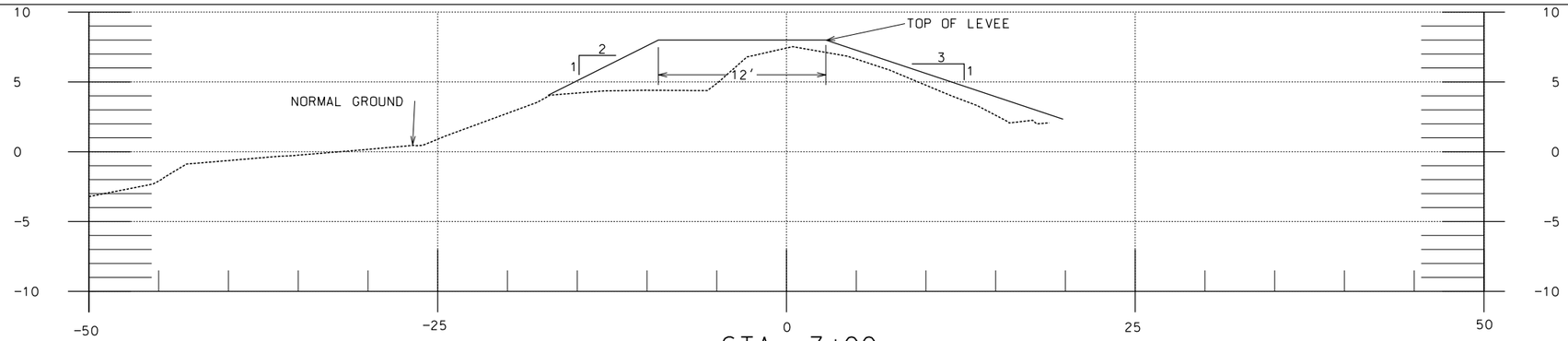

STA. 7+00

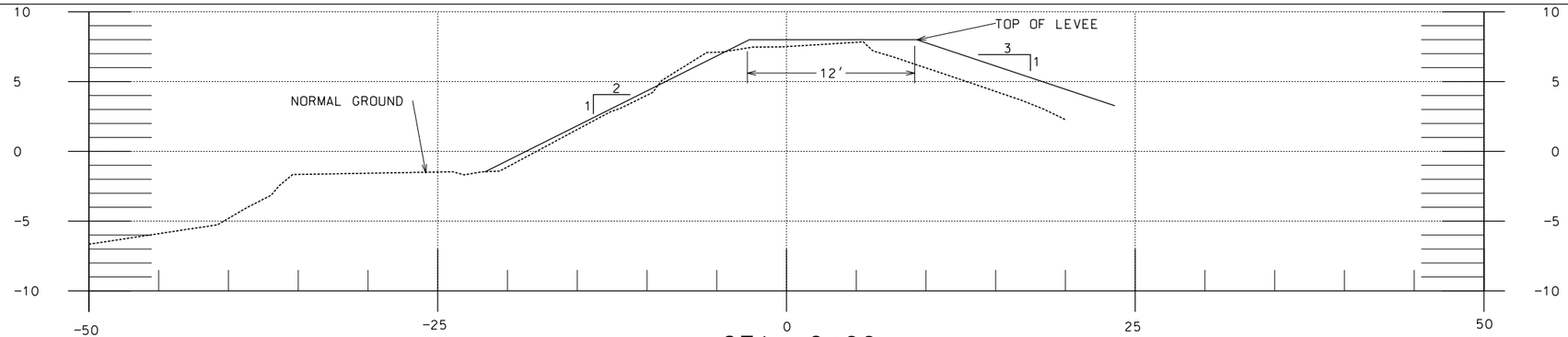

STA .8+00

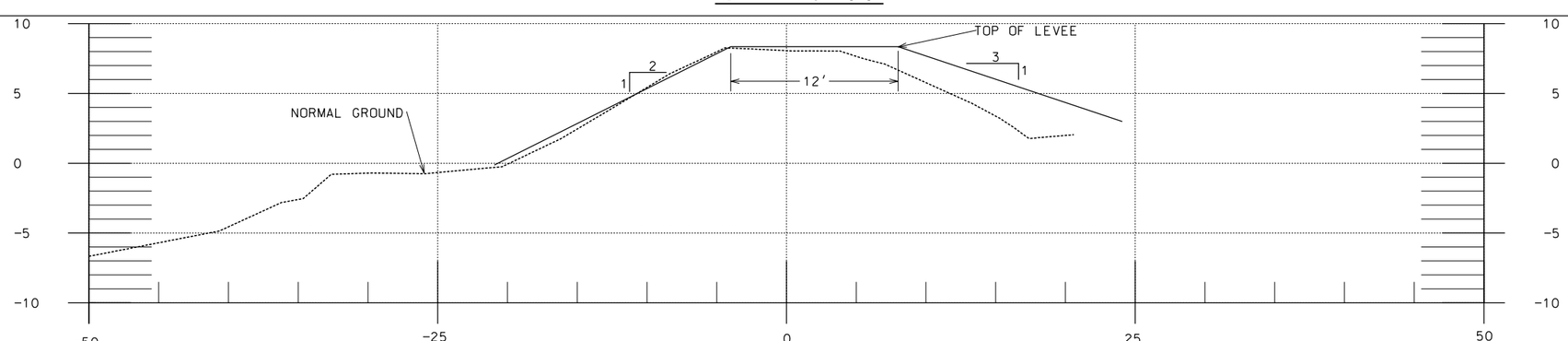

STA. 9+00

HORIZONTAL DATUM: NAD 83, LOUISIANA STATE COORDINATE SYSTEM, SOUTH ZONE
VERTICAL DATUM: NAVD88

...\WORKING MODEL DSR 109-05-001R.dgn 10/11/2005 4:33:24 PM

		Date
Designed	C. LAFLEUR	10/05
Drawn	A.J. GREMILLION	10/05
Checked		
Approved		

CROSS SECTIONS - EARTHEN LEVEE
DSR # 109-05-001R
MONTEGUT LEVEE REPAIR
TERREBONNE PARISH, LOUISIANA

NRCS
Natural Resources Conservation Service
United States Department of Agriculture

File Name
MONTEGUT LEVEE

Drawing Name
DSR#109-05-001R

Sheet 06 of 13

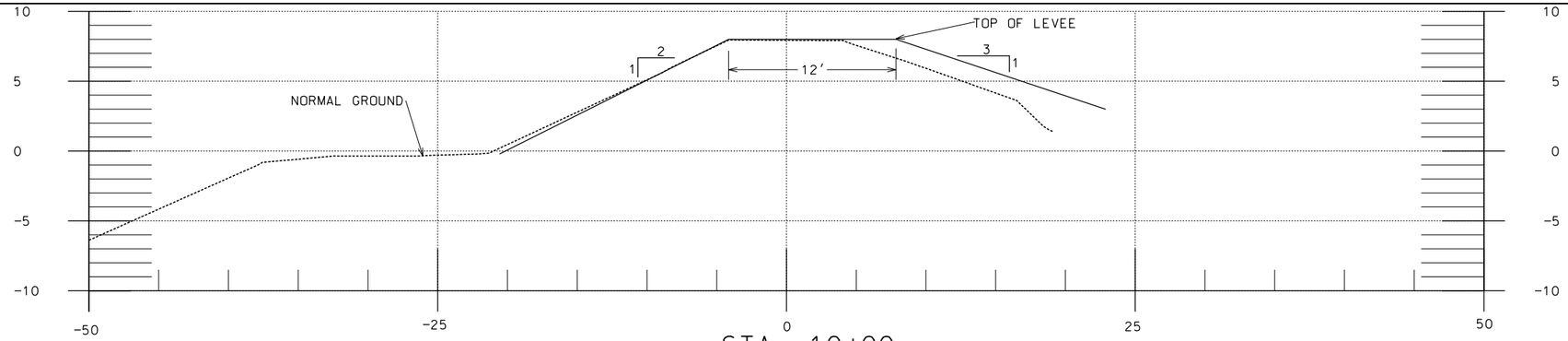

STA. 10+00

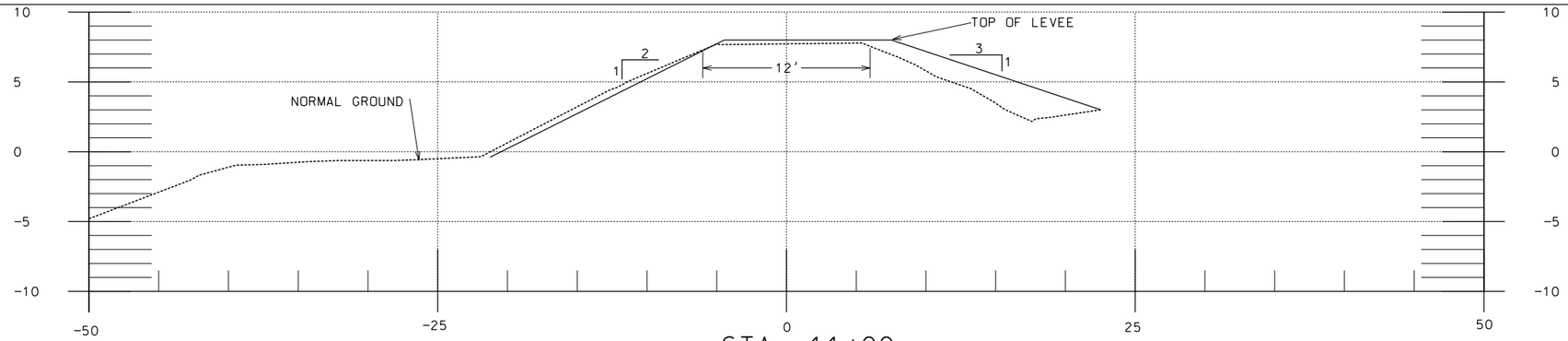

STA. 11+00

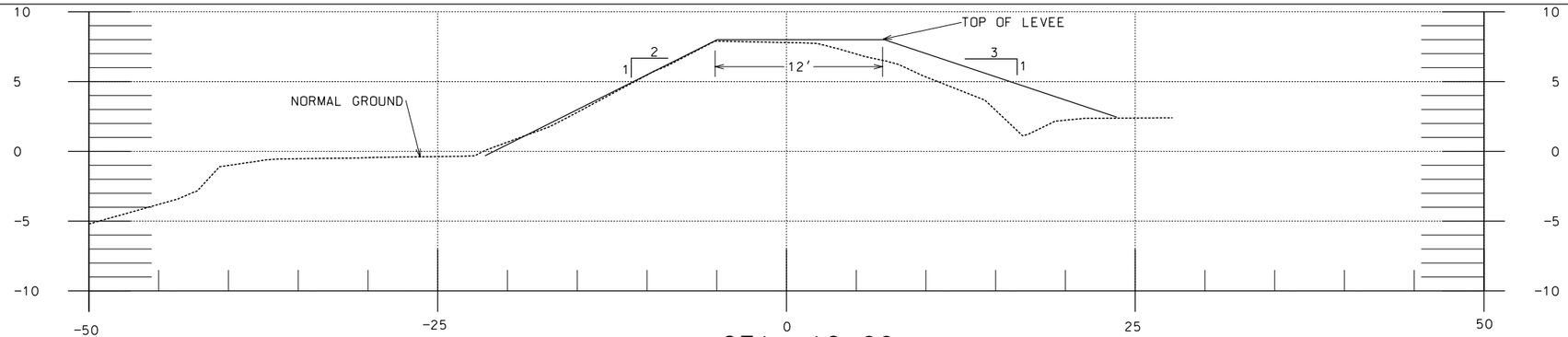

STA. 12+00

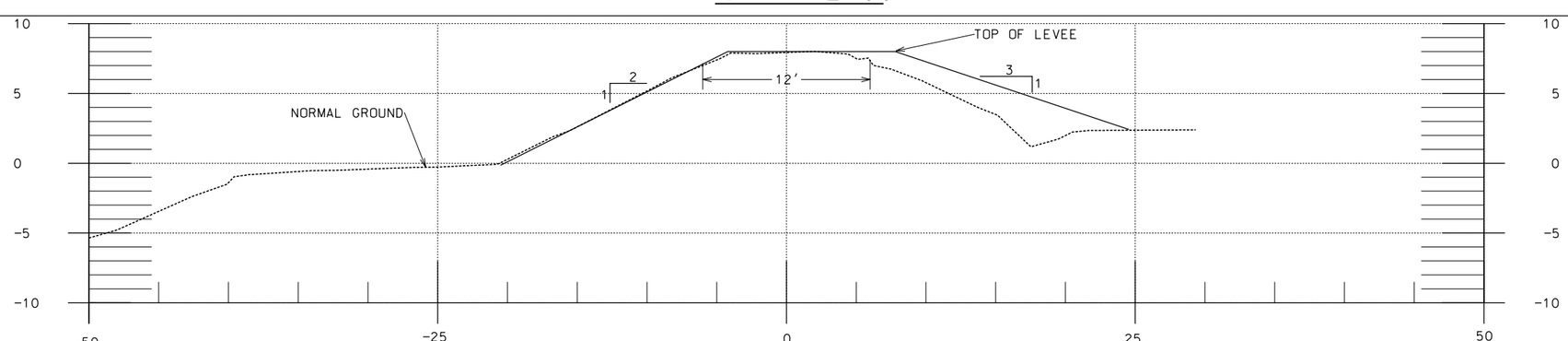

STA. 12+25

HORIZONTAL DATUM: NAD 83, LOUISIANA STATE COORDINATE SYSTEM, SOUTH ZONE
VERTICAL DATUM: NAVD88

...\WORKING MODEL DSR 109-05-001R.dgn 10/11/2005 4:34:23 PM

		Date
Designed	C. LAFLEUR	10/05
Drawn	A.J. GREMILLION	10/05
Checked		
Approved		

CROSS SECTIONS - EARTHEN LEVEE
DSR # 109-05-001R
MONTEGUT LEVEE REPAIR
TERREBONNE PARISH, LOUISIANA

NRCS
Natural Resources Conservation Service
United States Department of Agriculture

File Name
MONTEGUT LEVEE

Drawing Name
DSR#109-05-001R

Sheet 07 of 13

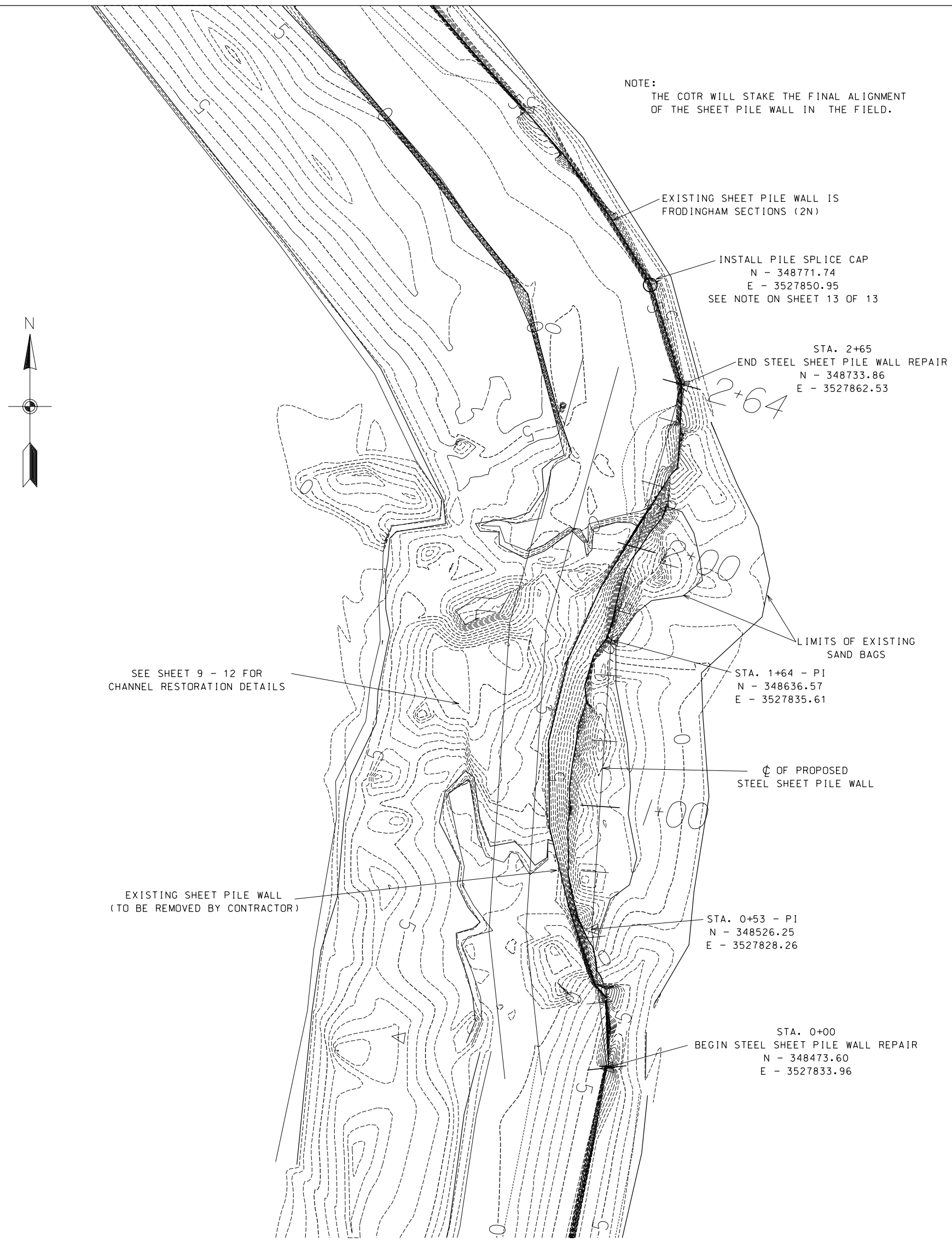

ESTIMATED QUANTITES	
STEEL SHEET PILE	265 lf
EXCAVATION	2750 cy
ROCKFILL	1490 cy
GEOTEXTILE	2660 sy
EARTHFILL	360 cy

PLAN -STEEL SHEET PILE WALL
SCALE AS SHOWN

20 0 20 40 60 80
SCALE IN FEET

HORIZONTAL DATUM: NAD 83, LOUISIANA STATE COORDINATE SYSTEM, SOUTH ZONE
VERTICAL DATUM: NAVD88

Sheet 08 of 13

Drawing Name DSR#109-05-001R

File Name MONTEGUT LEVEE

NRCS
Natural Resources Conservation Service
United States Department of Agriculture

PLAN MAP - SHEET PILE WALL
DSR # 109-05-001R
MONTEGUT LEVEE REPAIR
TERREBONNE PARISH, LOUISIANA

		Date
Designed	C. LAFLEUR	10/05
Drawn	A.J. GREMILLION	10/05
Checked		
Approved		

...\WORKING MODEL DSR 109-05-001R.dgn 10/14/2005 1:02:02 PM

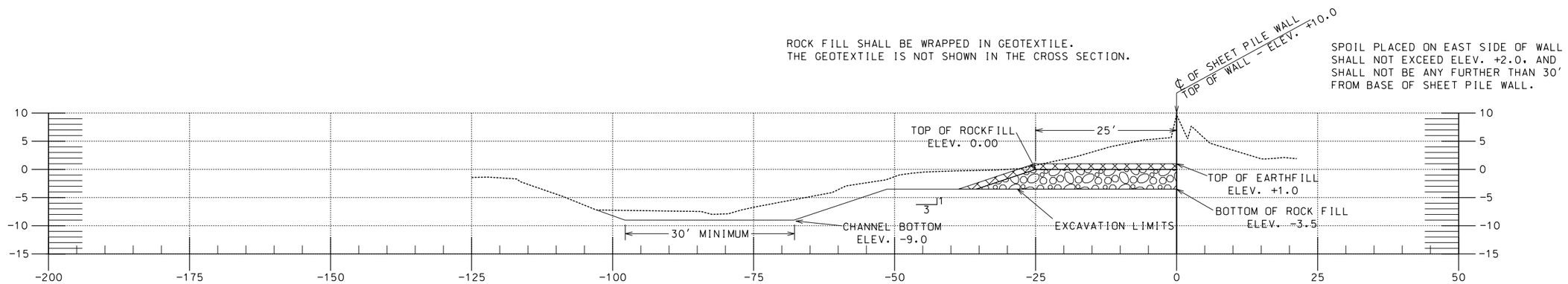

CROSS SECTION-STA. 0+00

SHEET PILE REPLACEMENT & CHANNEL RESTORATION

MONTEGUT LEVEE REPAIR-DSR# 109-05-001R

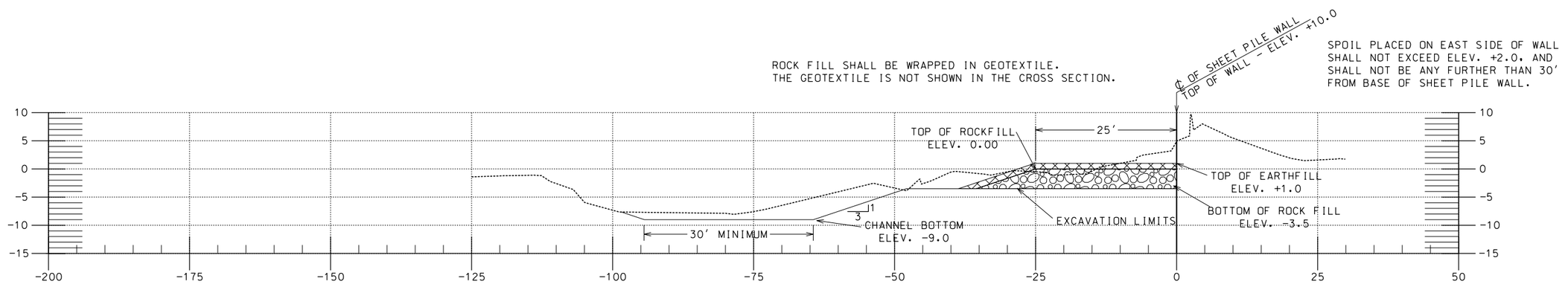

CROSS SECTION-STA. 0+25

SHEET PILE REPLACEMENT & CHANNEL RESTORATION

MONTEGUT LEVEE REPAIR-DSR# 109-05-001R

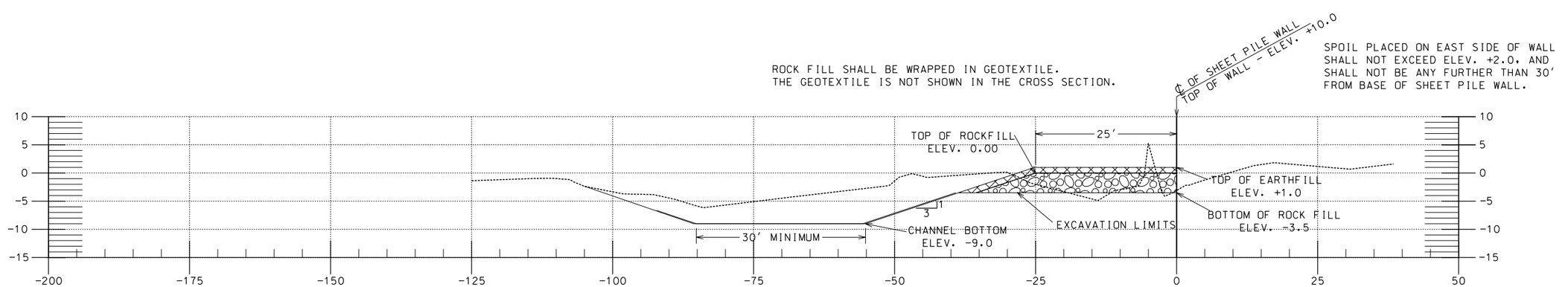

CROSS SECTION-STA. 0+50

SHEET PILE REPLACEMENT & CHANNEL RESTORATION

MONTEGUT LEVEE REPAIR-DSR# 109-05-001R

HORIZONTAL DATUM: NAD 83, LOUISIANA STATE COORDINATE SYSTEM, SOUTH ZONE
VERTICAL DATUM: NAVD88

		Date
Designed	C. LAFLEUR	10/05
Drawn	A.J. GREMILLION	10/05
Checked		
Approved		

CROSS SECTIONS - SHEET PILE WALL
DSR # 109-05-001R
MONTEGUT LEVEE REPAIR
TERREBONNE PARISH, LOUISIANA

NRCS
Natural Resources Conservation Service
United States Department of Agriculture

File Name
MONTEGUT LEVEE

Drawing Name
DSR#109-05-001R

Sheet 09 of 13

...\WORKING MODEL DSR 109-05-001R.dgn 10/14/2005 12:58:21 PM

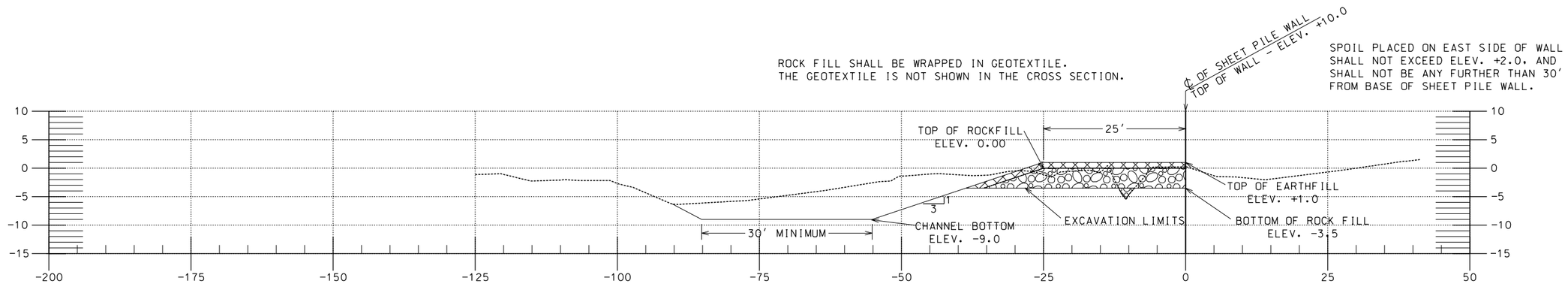

CROSS SECTION-STA. 0+75

SHEET PILE REPLACEMENT & CHANNEL RESTORATION

MONTEGUT LEVEE REPAIR-DSR# 109-05-001R

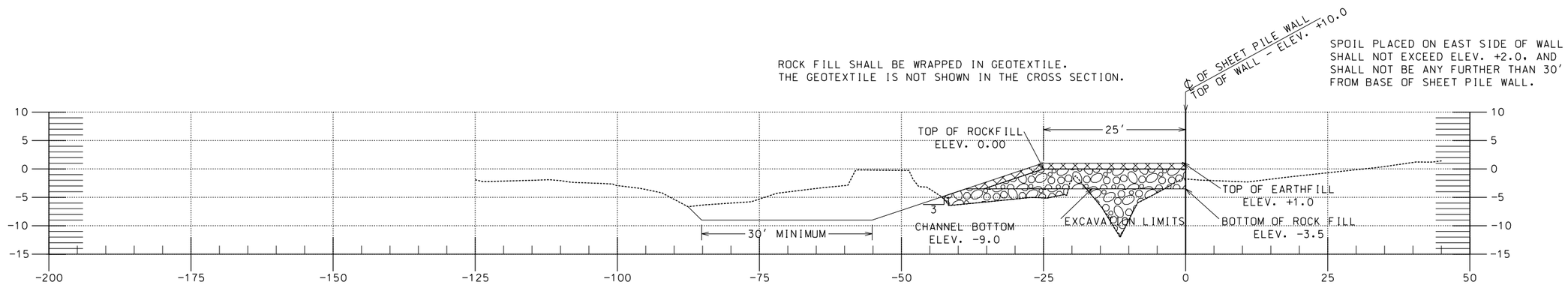

CROSS SECTION-STA. 1+00

SHEET PILE REPLACEMENT & CHANNEL RESTORATION

MONTEGUT LEVEE REPAIR-DSR# 109-05-001R

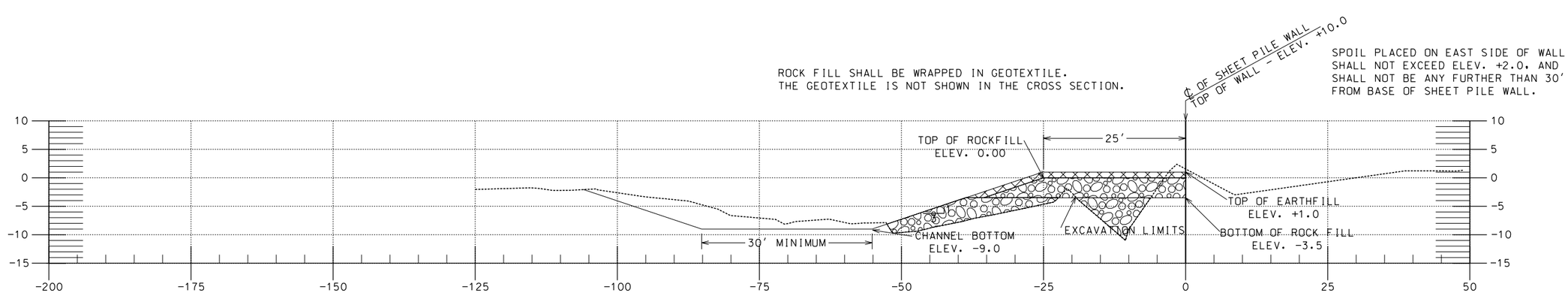

CROSS SECTION-STA. 1+25

SHEET PILE REPLACEMENT & CHANNEL RESTORATION

MONTEGUT LEVEE REPAIR-DSR# 109-05-001R

HORIZONTAL DATUM: NAD 83, LOUISIANA STATE COORDINATE SYSTEM, SOUTH ZONE
VERTICAL DATUM: NAVD88

...\WORKING MODEL DSR 109-05-001R.dgn 10/14/2005 12:59:07 PM

		Date
Designed	C. LAFLEUR	10/05
Drawn	A.J. GREMILLION	10/05
Checked		
Approved		

CROSS SECTIONS - SHEET PILE WALL
DSR # 109-05-001R
MONTEGUT LEVEE REPAIR
TERREBONNE PARISH, LOUISIANA

NRCS
Natural Resources Conservation Service
United States Department of Agriculture

File Name
MONTEGUT LEVEE

Drawing Name
DSR#109-05-001R

Sheet 10 of 13

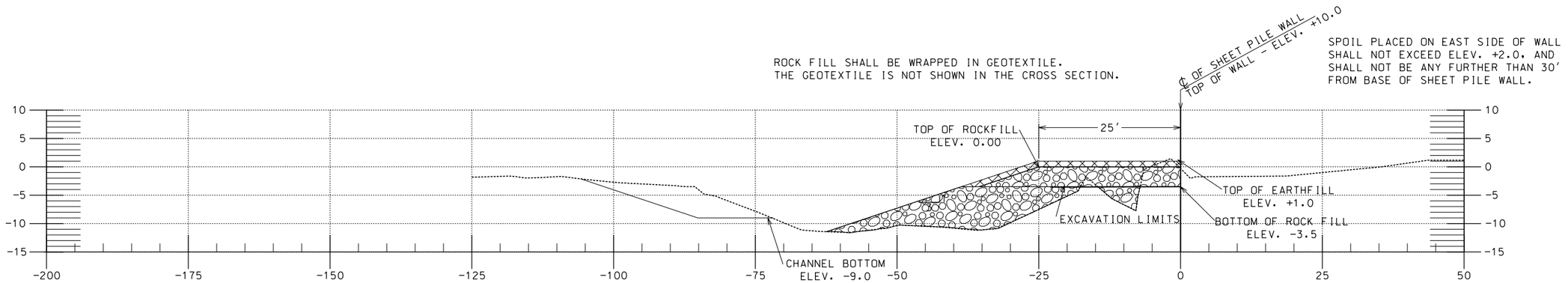

CROSS SECTION-STA. 1+50

SHEET PILE REPLACEMENT & CHANNEL RESTORATION

MONTEGUT LEVEE REPAIR-DSR# 109-05-001R

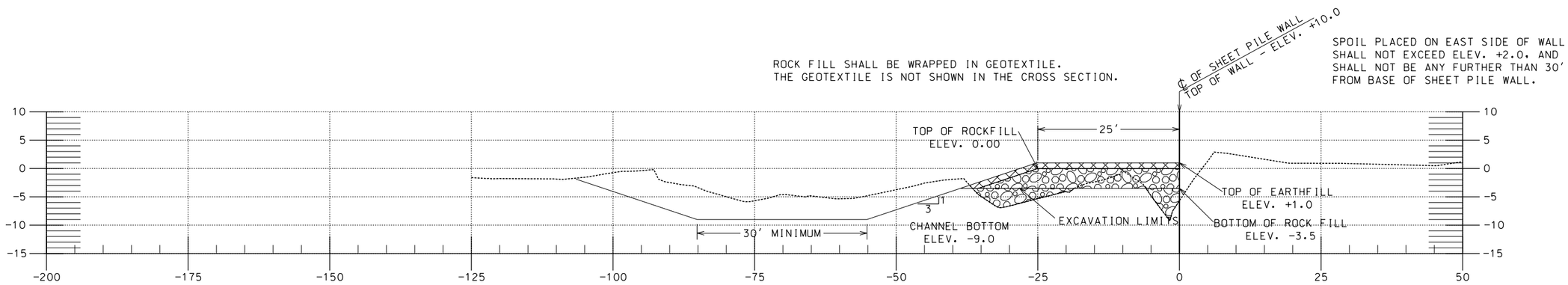

CROSS SECTION-STA. 1+75

SHEET PILE REPLACEMENT & CHANNEL RESTORATION

MONTEGUT LEVEE REPAIR-DSR# 109-05-001R

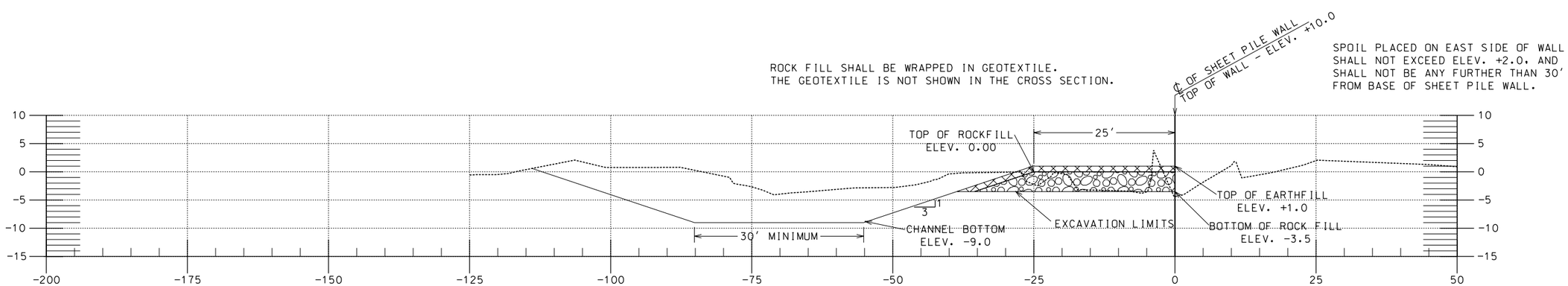

CROSS SECTION-STA. 2+00

SHEET PILE REPLACEMENT & CHANNEL RESTORATION

MONTEGUT LEVEE REPAIR-DSR# 109-05-001R

HORIZONTAL DATUM: NAD 83, LOUISIANA STATE COORDINATE SYSTEM, SOUTH ZONE
VERTICAL DATUM: NAVD88

		Date
Designed	C. LAFLEUR	10/05
Drawn	A.J. GREMILLION	10/05
Checked		
Approved		

CROSS SECTIONS - SHEET PILE WALL
DSR # 109-05-001R
MONTEGUT LEVEE REPAIR
TERREBONNE PARISH, LOUISIANA

NRCS
Natural Resources Conservation Service
United States Department of Agriculture

File Name
MONTEGUT LEVEE

Drawing Name
DSR#109-05-001R

Sheet 11 of 13

...\WORKING MODEL DSR 109-05-001R.dgn 10/14/2005 12:59:51 PM

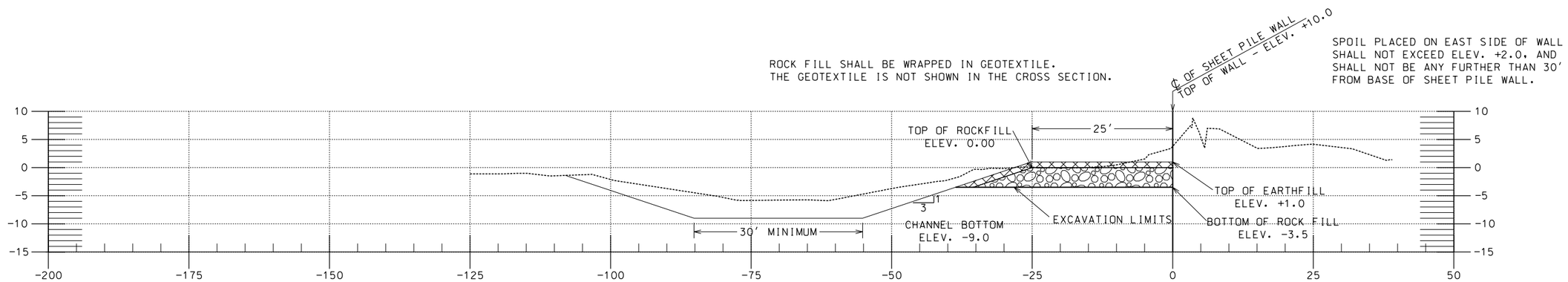

CROSS SECTION-STA. 2+25

SHEET PILE REPLACEMENT & CHANNEL RESTORATION

MONEGUT LEVEE REPAIR-DSR# 109-05-001R

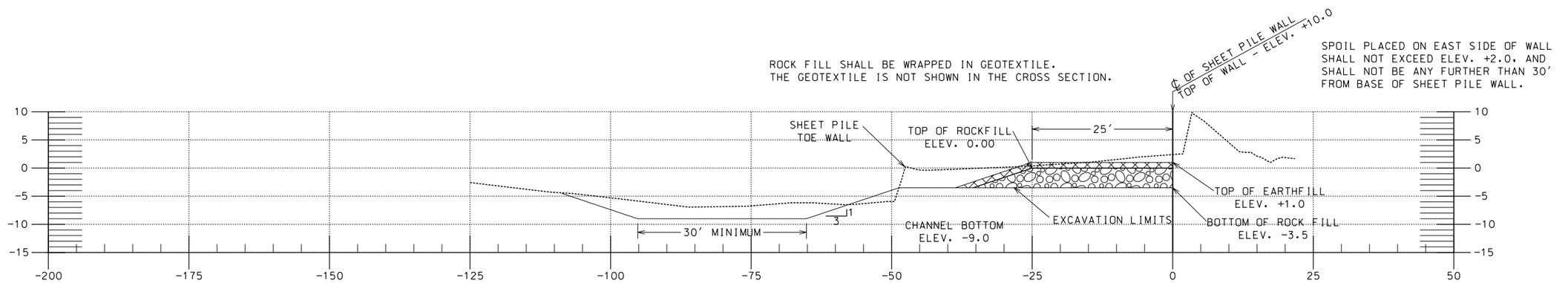

CROSS SECTION-STA. 2+50

SHEET PILE REPLACEMENT & CHANNEL RESTORATION

MONEGUT LEVEE REPAIR-DSR# 109-05-001R

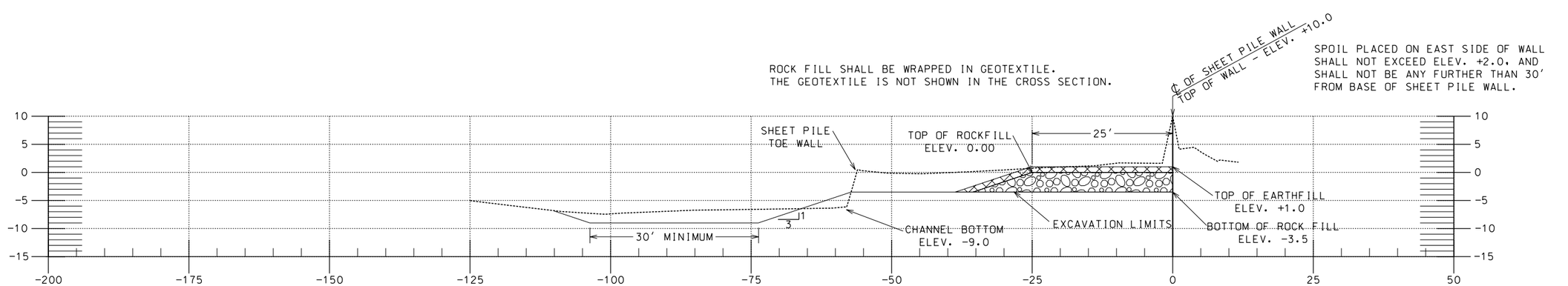

CROSS SECTION-STA. 2+65

SHEET PILE REPLACEMENT & CHANNEL RESTORATION

MONEGUT LEVEE REPAIR-DSR# 109-05-001R

HORIZONTAL DATUM: NAD 83, LOUISIANA STATE COORDINATE SYSTEM, SOUTH ZONE
VERTICAL DATUM: NAVD88

		Date
Designed	C. LAFLEUR	10/05
Drawn	A.J. GREMILLION	10/05
Checked		
Approved		

CROSS SECTIONS - SHEET PILE WALL
DSR # 109-05-001R
MONTEGUT LEVEE REPAIR
TERREBONNE PARISH, LOUISIANA

NRCS
Natural Resources Conservation Service
United States Department of Agriculture

File Name
MONTEGUT LEVEE

Drawing Name
DSR#109-05-001R

Sheet 12 of 13

...\WORKING MODEL DSR 109-05-001R.dgn 10/14/2005 1:00:34 PM

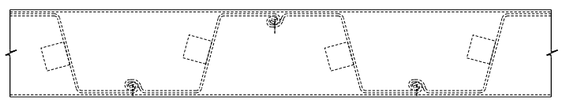

PLAN VIEW

(TYPICAL PILE CAP TO SHEET PILE CONNECTION)

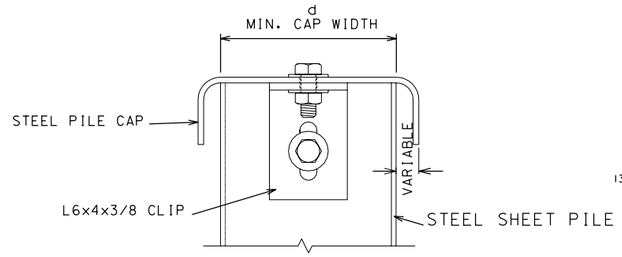

TYPICAL PILE CAP TO SHEET PILE CONNECTION

(SIDE VIEW)

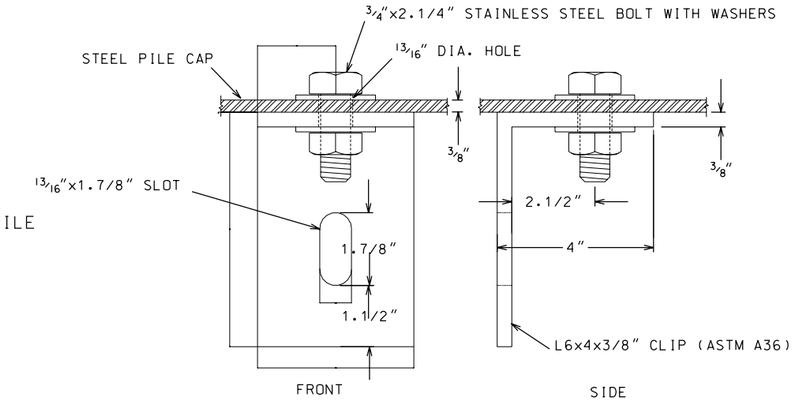

L6x4x3/8" (CLIP)

(NOT TO SCALE)

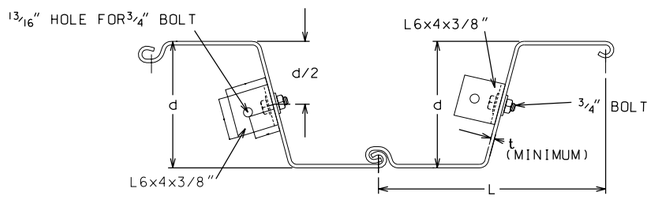

TYPICAL SHEET PILE DETAIL

(NORMAL CONFIGURATION)

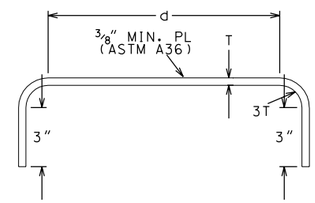

TYPICAL PILE CAP

(NOT TO SCALE)

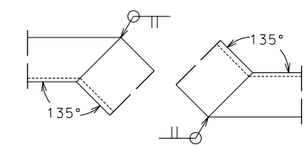

45° PILE CAP TRANSITION

(NOT TO SCALE)

NOTE:
THE SPLICE CAP TO INSTALLED AT THE PRE-EXISTING PILE CAP BUTT JOINT SHALL BE SIZED TO FIT THE PILE CAP AT THAT LOCATION AND MAY VARY IN DIMENSION FROM THE SPLICE CAP TO BE INSTALLED ON THE PILE CAP IN THIS CONTRACT.

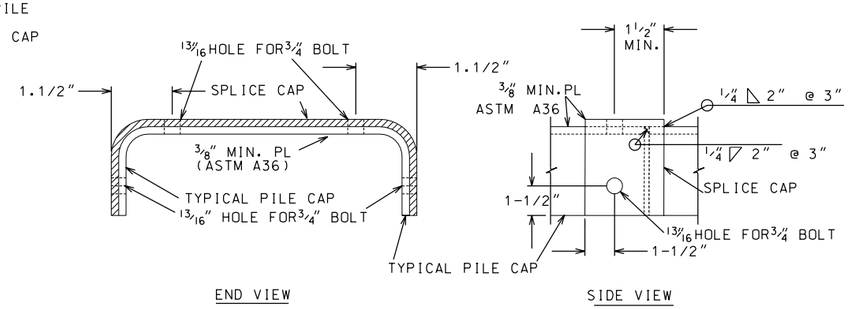

PILE CAP SPLICE DETAILS

(NOT TO SCALE)

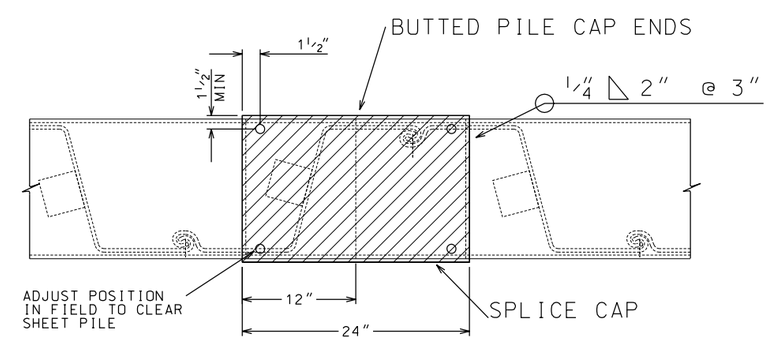

SPLICE CAP PLAN VIEW

(TYPICAL PILE CAP TO SHEET PILE CONNECTION)

SHEET PILE SCHEDULE

IN-PLACE LENGTH	LINEAR FEET	MINIMUM IN3/LF OF WALL	SUBTOTALS (FT. SQ)
50'	265'	30.0	13,110

NOTES:

1. THE MINIMUM WEB AND FLANGE THICKNESS OF SHEET PILES SHALL BE 0.30".
2. THE CONTRACTOR SHALL SUBMIT A METHOD OF CONNECTING THE PILE CAP TO THE SHEET PILE AND ALL DRAWINGS FOR APPROVAL 4 DAYS PRIOR TO FABRICATION.
3. STEEL SHEET PILE SHALL CONFORM TO ASTM SPECIFICATION A572,GR50. ALL CHANNEL, ANGLES AND PLATES SHALL CONFORM TO ASTM A36.
4. ALL SHEET PILE DIMENSIONS ARE TYPICAL, AND ARE SUBJECT TO CHANGE BASED ON MANUFACTURER/SUPPLIER.
5. SHEET PILE WILL BE DRIVEN IN THE "NORMAL CONFIGURATION" AS SHOWN.
6. THE HOLES IN THE SHEET PILE SHALL BE FIELD OR SHOP DRILLED; OR NEATLY CENTER PUNCHED AND TORCH CUT AS CONCURRED IN BY THE COTR.
7. THE L 6x4x3/8" CLIPS ARE TO BE PLACED ON THE MIDDLE SECTION OF EACH PILE AS SHOWN IN THE DRAWINGS.
8. PILE CAP SHALL BE PLACED ALONG THE ENTIRE LENGTH OF THE SHEET PILE.
9. FINAL LOCATION OF STRUCTURE TO BE STAKED IN THE FIELD BY THE COTR
10. ALL SHEET PILING AND CUTS, PILE CAP AND CLIPS SHALL BE PAINTED AS SPECIFIED IN CONSTRUCTION SPECIFICATION 82.

NOTE: THE CONTRACTOR SHALL BE ALLOWED TO UTILIZE AN APPROPRIATE STANDARD CHANNEL SECTION IN-LIEU OF A FABRICATED PILE CAP. REFER TO CONSTRUCTION SPECIFICATION 81, METAL FABRICATION AND INSTALLATION FOR ADDITIONAL REQUIREMENTS

REVISIONS			
NO.	DATE	APPROVED	TITLE

		DATE
DESIGNED	C. LAFLEUR	10/05
DRAWN	P. COLE	10/05
CHECKED		
APPROVED		

SHEET PILE DETAILS
DSR # 109-05-001R
MONTEGUT LEVEE REPAIR
TERREBONNE PARISH, LOUISIANA

NRCS
Natural Resources Conservation Service
United States Department of Agriculture

FILE NAME
SHEET PILE DETAIL

DRAWING NAME
DSR•109-05-001R

SHEET 13 OF 13

...\Drawings\SHEETPILE DETAIL.dgn 10/14/2005 1:16:00 PM