DSR NO: 051-05-027K

United States Department of Agriculture
Natural Resources Conservation Service

OMB No. 0578-0030
NRCS-PDM-20

DAMAGE SURVEY REPORT (DSR)
Emergency Watershed Protection Program – Recovery

Section 1A

NRCS Entry Only
Eligible: YES X NO ____
Approved: YES X NO ____
Funding Priority Number (from Section 4) 3e
Limited Resource Area: YES ____ NO X

Date of Report: 5/2/2006

DSR Number: 051-05-027K Project Number: _____

Section 1B Sponsor Information

Sponsor Name: Jefferson Parish

Address: P.O. Box 10242

City/State/Zip: Jefferson, Louisiana 70054

Telephone Number: (504) 364-2700 Fax: _____

Section 1C Site Location Information

County: Jefferson State: Louisiana Congressional District: 02

Latitude: Start 29.91206174 Longitude: Start -90. 15164020 Section: 8 Township: 13S Range: 23E
End 29. 91184984 End -90. 15179836

UTM Coordinates: _____

Drainage Name: Railroad Canal Reach: 170 LF (Sites 1a, 1b, & 1c.)

Damage Description: Slope failure

Section 1D Site Evaluation

All answers in this Section must be YES in order to be eligible for EWP assistance.

Site Eligibility	YES	NO	Remarks
Damage was a result of a natural disaster?*	X		Hurricane Katrina Damage
Recovery measures would be for runoff retardation or soil erosion prevention?*	X		
Threat to life and/or property?*	X		
Event caused a sudden impairment in the watershed?*	X		
Imminent threat was created by this event?**	X		
For structural repairs, not repaired twice within ten years?**	X		
Site Defensibility			
Economic, environmental, and social documentation adequate to warrant action? (Go to pages 3, 4, 5 and 6 ***)	X		
Proposed action technically viable? (Go to Page 9 ***)	X		

Have all the appropriate steps been taken to ensure that all segments of the affected population have been informed of the EWP program and its possible effects? YES X NO ____

Comments: _____

* Statutory
** Regulation
*** DSR Pages 3 through 6 and 9 are required to support the decisions recorded on this summary page.

Section 1E Proposed Action

Describe the preferred alternative from Findings: Section 5 A:
The proposed action is the preferred alternative. The proposed action is the least costly alternative that achieves the restoration objections, maximizes environmental benefits, and is socially acceptable.

Total installation cost identified in this DSR: Section 3:

Section 1F NRCS State Office Review and Approval

Reviewed By: _____ Date Reviewed: 11/24/06
State EWP Program Manager

Approved By: Donald W. Gohmert Date Approved: 12/1/06
State Conservationist

PRIVACY ACT AND PUBLIC BURDEN STATEMENT

NOTE: The following statement is made in accordance with the Privacy Act of 1974, (5 U.S.C. 552a) and the Paperwork Reduction Act of 1995, as amended. The authority for requesting the following information is 7 CFR 624 (EWP) and Section 216 of the Flood Control Act of 1950, Public Law 81-516, 33 U.S.C. 701b-1; and Section 403 of the Agricultural Credit Act of 1978, Public Law 95-334, as amended by Section 382, of the Federal Agriculture Improvement and Reform Act of 1996, Public Law 104-127, 16 U.S.C. 2203. EWP, through local sponsors, provides emergency measures for runoff retardation and erosion control to areas where a sudden impairment of a watershed threatens life or property. The Secretary of Agriculture has delegated the administration of EWP to the Chief or NRCS on state, tribal and private lands.

Signing this form indicates the sponsor concurs and agrees to provide the regional cost-share to implement the EWP recovery measure(s) determined eligible by NRCS under the terms and conditions of the program authority. Failure to provide a signature will result in the applicant being unable to apply for or receive a grant the applicable program authorities. Once signed by the sponsor, this information may not be provided to other agencies. IRS, Department of Justice, or other State or Federal Law Enforcement agencies, and in response to a court or administrative tribunal.

The provisions of criminal and civil fraud statutes, including 18 U.S.C. 286, 287, 371, 641, 651, 1001; 15 U.S.C. 714m; and 31 U.S.C. 3729 may also be applicable to the information provided. According to the Paperwork Reduction Act of 1995, an agency may not conduct or sponsor, and a person is not required to respond to a collection of information unless it displays a valid OMB control number. The valid OMB control number for this information collection is 0578-0030. The time required to complete this information collection is estimated to average 117/1.96 minutes/hours per response, including the time for reviewing instructions, searching existing data sources, field reviews, gathering, designing, and maintaining the data needed, and completing and reviewing the collection information.

USDA NONDISCRIMINATION STATEMENT

"The U.S. Department of Agriculture (USDA) prohibits discrimination in all its programs and activities on the basis of race, color, national origin, age, disability, and where applicable, sex, marital status, familial status, parental status, religion, sexual orientation, genetic information, political beliefs, reprisal, or because all or part of an individual's income is derived from any public assistance program. (Not all prohibited bases apply to all programs.)

Persons with disabilities who require alternative means for communication of program information (Braille, large print, audiotape, etc.) should contact USDA's TARGET Center at (202) 720-2600 (voice and TDD). To file a complaint of discrimination write USDA, Director of Civil Rights, 1400 Independence Avenue, SW, Washington, DC 20250-941 0 or call (800)795-3272 (voice) or (202)720-6382 (TDD). USDA is an equal opportunity provider and employer.

Civil Rights Statement of Assurance

The program or activities conducted under this agreement will be in compliance with the nondiscrimination provisions contained in the Titles VI and VII of the Civil Rights Act of 1964, as amended; the Civil Rights Restoration Act of 1987 (Public Law 100-259); and other nondiscrimination statutes: namely, Section 504 or the Rehabilitation Act of 1973, Title IX of the Amendments of 1972, the Age Discrimination Act of 1975, and the Americans with Disabilities Act of 1990. They will also be in accordance with regulations of the Secretary of Agriculture (7 CFR 15, 15a, and 15b), which provide that no person in the United States shall on the grounds of race, color, national origin, gender, religion, age or disability, be excluded from participation in, be denied the benefits of, or otherwise subjected to discrimination under any program or activity receiving Federal financial assistance from the U.S. Department of Agriculture or any agency thereof.

Section 2 Environmental Evaluation

2A Resource Concerns	2B Existing Condition	2C Alternatives and Effects		
		Proposed Action	No Action	Alternative
		Earth and Rock Slope repair	No Repair	Steel sheetpile toewall
		2D Effects of Alternatives		
Soil				
Soil Mass Movement	50 Tons/Acre	2 Tons/Acre	50 Tons/Acre	2 Tons/Acre
Water				
Downstream water rights	Will not have to drain channel to conduct repairs	No Effect	No Effect	No Effect
Turbidity	Increased turbidity decreasing water transparency	Long term improvement, short term increases in turbidity	Increased turbidity decreasing water transparency	Long term improvement, short term increases in turbidity
Air				
PM-10	Attainment	Attainment	Attainment	Attainment
Plant				
Aquatic Plant Health/Vigor	Poor due to decreased water transparency	Improved due to improved water transparency	Poor due to decreased water transparency	Improved due to improved water transparency
Emergent Health/Vigor	Poor due to steep slope and reduced emergent substrate	Improved with earthen slope providing emergent substrate	Poor due to steep slope and reduced emergent substrate	No emergent habitat with sheet pile structure.
Riparian Vegetation	Not suitable to plants because of steep slope	Established grass buffer above rock fill and on berms will provide riparian habitat	Not suitable to plants because of steep slope	Established grass buffer above rock fill and on berms will provide riparian habitat
Animal				
Fish habitat	Decreased due to increased turbidity and increased sedimentation	Improved water quality, decreased sedimentation and increased edge habitat	Decreased due to increased turbidity and increased sedimentation	Improved water quality, decreased sedimentation.
Wading Bird Habitat	Decreased due to steep slope	Increased shallow water foraging areas.	Decreased due to steep slope	Reduced wading bird habitat with toewall installation
Domestic and Migratory Waterfowl	Poor habitat due to steep slope	Increased riparian area	Poor habitat due to steep slope	Increased riparian area
Other				
Maintenance	Unsafe to unstable slope	Improved	Unsafe to unstable slope	Improved
Aesthetics	Unsightly exposed slope	Improved	Unsightly exposed slope	Improved

Section 2E Special Environmental Concerns

Resource Consideration	Existing Condition	Alternatives and Effects		
		Proposed Action	No Action	Alternative
Clean Water Act Waters of the U.S.	USACE Jurisdiction.	Improved water quality. Would require a CWA permit from USACE.	Decreased water quality. No permit required.	Improved water quality. Would require a permit CWA from USACE.
Coastal Zone Management Areas	The area is within the Coastal Zone Management Area (CZMA). Drainage impared.	Consistency authorization needed.	No authorization needed.	Consistency authorization needed.
Coral Reefs	N/A (FOTG II)	N/A	N/A	N/A
Cultural Resources	(FOTG II) None observed onsite. Cross reference with state archeologist.	(FOTG II) None observed onsite. Cross reference with state archeologist..	(FOTG II) None observed onsite. Cross reference with state archeologist.	(FOTG II) None observed onsite. Cross reference with state archeologist.
Endangered and Threatened Species	(FOTG II) (Federal and State Lists) None observed, 10 known, 1 possible T&E species.	(FOTG II) (Federal and State Lists) None observed, 10 known, 1 possible T&E species	(FOTG II) (Federal and State Lists) None observed, 10 known, 1 possible T&E species	(FOTG II) (Federal and State Lists) None observed, 10 known, 1 possible T&E species
Environmental Justice	N/A (FOTG II)	N/A	N/A	N/A
Essential Fish Habitat	(FOTG II & NOAA) No EFH	(FOTG II & NOAA) No EFH	(FOTG II & NOAA) No EFH	(FOTG II & NOAA) No EFH
Fish and Wildlife Coordination	State level review with USFWS and LDWF. Consultation not required for slope repair.	State level review with USFWS and LDWF. Consultation not required for slope repair.	State level review with USFWS and LDWF. Consultation not required for slope repair.	State level review with USFWS and LDWF. Consultation not required for slope repair..
Floodplain Management	All project sites are located within the 100 year floodplain.	Maintenance of canals and levees prevents frequent flooding.	Maintenance of canals and levees prevents frequent flooding.	Maintenance of canals and levees prevents frequent flooding.
Invasive Species	Alligator weed and Johnsongrass is prevalent.	Increased spreading of Johnsongrass due to exposed slope.	Invasive plants remain and may spread without management.	Increased spreading of Johnsongrass due to exposed slope.
Migratory Birds	Mowed grass does not provide migratory bird habitat. Open water channel - no impact.	Mowed grass does not provide migratory bird habitat. Open water channel - no impact.	Mowed grass does not provide migratory bird habitat. Open water channel - no impact.	Mowed grass does not provide migratory bird habitat. Open water channel - no impact.
Natural Areas	None present (FOTG II)	None present (FOTG II)	None present (FOTG II)	None present (FOTG II)
Prime and Unique Farmlands	None present (FOTG II)	None present (FOTG II)	None present (FOTG II)	None present (FOTG II)
Riparian Areas	No riparian habitat is present due to steep bank.	Limited amount of riparian habitat could be established.	No riparian habitat is present due to steep bank.	Limited amount of riparian habitat could be established.
Scenic Beauty	None present (FOTG II)	None present (FOTG II)	None present (FOTG II)	None present (FOTG II)
Wetlands	Open water containing floating aquatics, algae, few emergent plants, litter.	Open water containing floating aquatics, algae, few emergent plants, litter. No impacts.	Open water containing floating aquatics, algae, few emergent plants, litter. No impacts.	Open water containing floating aquatics, algae, few emergent plants, litter. No impacts.
Wild and Scenic Rivers	(FOTG II) (LDWF scenic streams list) Not Listed.	(FOTG II) (LDWF scenic streams list) Not Listed.	(FOTG II) (LDWF scenic streams list) Not Listed.	(FOTG II) (LDWF scenic streams list) Not Listed.

Completed By: _Gene Barickman_____ Date: _5/10/2006_____

Section 2F Economic

This section must be completed by each alternative considered (attach additional sheets as necessary).

	Future Damages ($)	Damage Factor (%)	Near Term Damage Reduction
Properties Protected (Private)			**0**
35 Homes @ $64,000	**$2,240,000**	**.25**	**$560,000**
Properties Protected (Public)			**0**
Business Losses			**0**
Other			**0**
		Near Term Damage Reduction	**$560,000**
Net Benefit (Total Near Term Damage Reduction Minus Cost From Sec. 3)			

Completed By: ____Alan Bolotte_____ Date: 5/10/06

Section 2G Social Consideration

This section must be completed by each alternative considered (attach additional sheets as necessary).

	YES	NO	Remarks
Has there been a loss of life as a result of the watershed impairment?		X	
Is there the potential for loss of life due to damages from the watershed impairment?	X		
Has access to a hospital or medical facility been impaired by watershed impairment?	X		
Has the community as a whole been adversely impacted by the watershed impairment (life and property ceases to operate in a normal capacity)	X		The potential for flooding in this area is high and if flooding were to occur the community as a whole would be effected.
Is there a lack or has there been a reduction of public safety due to watershed impairment?	X		

Completed By: _____Alan Bolotte_____ Date: _____5/10/06_____

Section 2H Group Representation and Disability Information

This section is completed only for the preferred alternative selected.

Group Representation	Number
American Indian/Alaska Native Female Hispanic	
American Indian/Alaska Native Female Non-Hispanic	
American Indian/Alaska Native Male Hispanic	
American Indian/Alaska Native Male Non-Hispanic	
Asian Female Hispanic	
Asian Female Non-Hispanic	2
Asian Male Hispanic	
Asian Male Non-Hispanic	2
Black or African American Female Hispanic	
Black or African American Female Non-Hispanic	31
Black or African American Male Hispanic	
Black or African American Male Non-Hispanic	29
Hawaiian Native/Pacific Islander Female Hispanic	
Hawaiian Native/Pacific Islander Female Non-Hispanic	
Hawaiian Native/Pacific Islander Male Hispanic	
Hawaiian Native/Pacific Islander Male Non-Hispanic	
White Female Hispanic	
White Female Non-Hispanic	24
White Male Hispanic	
White Male Non-Hispanic	22
Total Group	110

Census tract(s) From 2000 Census Data for St. Bernard Parish

Completed By: ____Alan Bolotte_____ Date: ____5/10/06_____

Section 2I. Required consultation or coordination between the lead agency and/or the RFO and another governmental unit including tribes:

Easements, permissions, or permits:

Access permission will be required.

CWA permit prior to construction in channel is needed.

Water Quality Certification is needed.

A consistency authorization is needed since project location is in the coastal zone.

Mitigation Description:

Construction will be done in consecutive days to minimize impacts to local wildlife.

Re-seed construction areas to NRCS Standard and Specification 342 to minimize run-off effects and provide vegetative riparian buffer.

Agencies, persons, and references consulted, or to be consulted:

U.S. Army Corps of Engineers

LDWF

Jefferson Parish

LDNR

Private Landowners

LDEQ

Section 3 Engineering Cost Estimate

Completed By: ____Marty Comstock_____ Date: _____5/4/06_____

This section must be completed by each alternative considered (attach additional sheets as necessary).

Proposed Recovery Measure (including mitigation)	Quantity	Units	Unit Cost ($)	Amount ($)
Site 1a – Wakefield Piling	110	LF		
Site 1b – Rock Riprap	30	LF		
Site 1c – Rock Riprap	30	LF		
Total Installation Cost (Enter in Section 1F)$				

Unit Abbreviations:
AC Acre
CY Cubic Yard
EA Each
HR Hour
LF Linear Feet
LS Lump Sum
SF Square Feet
SY Square Yard
TN Ton
Other (Specify)

Section 4 NRCS EWP Funding Priority

Complete the following section to compute the funding priority for the recovery measures in this application (see instructions on page 10).

Priority Ranking Criteria	**Yes**	**No**		**Ranking Number Plus Modifier**
1. Is this an exigency situation?		x		
2. Is this a site where there is serious, but not immediate threat to human life?	x			
3. Is this a site where buildings, utilities, or other important infrastructure components are threatened?	x			3e
4. Is this site a funding priority established by the NRCS Chief?	x			
The following are modifiers for the above criteria			**Modifier**	
a. Will the proposed action or alternatives protect or conserve federally-listed threatened and endangered species or critical habitat?				
b. Will the proposed action or alternatives protect or conserve cultural sites listed on the National Register of Historic Places?				
c. Will the proposed action or alternatives protect or conserve prime or important farmland?				
d. Will the proposed action or alternatives protect or conserve existing wetlands?				
e. Will the proposed action or alternatives maintain or improve current water quality conditions?			e	
f. Will the proposed action or alternatives protect or conserve unique habitat, including but not limited to, areas inhabited by State-listed species, fish and wildlife management area, or State identified sensitive habitats?				

Enter priority computation in Section 1A, NRCS Entry, Funding priority number.

Remarks:

DSR NO: 051-05-027K

Section 5A Findings

Finding: Indicate the preferred alternative from Section 2 (Enter to Section 1E):

The proposed action is the preferred alternative. The proposed action is the least costly alternative that achieves the restoration objections, maximizes environmental benefits, and is socially acceptable.

I have considered the effects of the action and the alternatives on the Environmental Economic, Social; the Special Environmental Concerns; and the extraordinary circumstances (40 CFR 1508.27). I find for the reasons stated below, that the preferred alternative:

__X__ Has been sufficiently analyzed in the EWP PEIS (reference all that apply)
Chapter 5.2.2.2.2
Chapter _____
Chapter _____
Chapter _____
Chapter _____

____ May require the preparation of an environmental assessment or environmental impact statement. The action will be referred to the NRCS State Office on this date:

NRCS representative of the DSR team

Title: Allen Goldstein DC Date: 7/12/06

Section 5B Comments:

Section 5C **Sponsor Concurrence:** _____

Sponsor Representative

Title: [illegible] Date: 7/12/06

Section 6 Attachments:

A. Location Map
B. Site Plan or Sketches
C. Other (explain)

DSR-051-05-027K
RAILROAD CANAL

EMERGENCY REPAIR
BUILT UNDER THE
EMERGENCY WATERSHED PROTECTION PROGRAM
BY JEFFERSON PARISH
WITH THE ASSISTANCE OF THE
NATURAL RESOURCES CONSERVATION SERVICE
OF THE
UNITED STATES DEPARTMENT OF AGRICULTURE
2007

VICINITY MAP
DSR-051-05-027K

5000 0 5000 10000 15000 20000
SCALE IN FEET

MAPS COPYRIGHT "THE ROADS OF LOUISIANA", SHEARER PUBLISHING

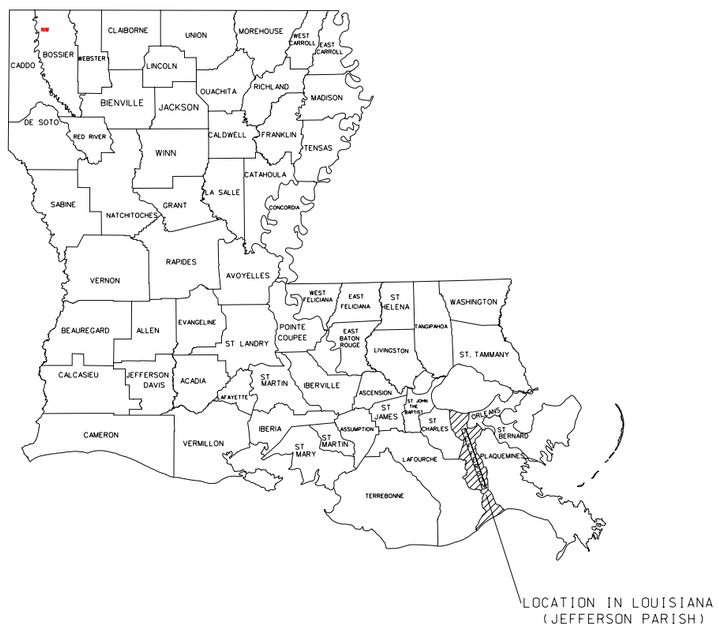

INDEX TO DRAWINGS

1. COVER SHEET & VICINTY MAP
2. PROJECT PLAN MAP
3. SPOIL AND DEBRIS DISPOSAL MAP
4. TYPICAL ROCK CHANNEL SLOPE REPAIR
5. SITE PLAN - SITE #1
6. SITE #1 - SECTIONS - STA. 0+05 & 0+66
7. SITE #1 - SECTIONS - STA. 0+91 & 1+17

REVISIONS			
NO.	DATE	APPROVED	TITLE

		DATE
DESIGNED	RONDA HATHCOCK	03/07
DRAWN	MATTHEW SPRINGER	03/07
CHECKED	CHERIE LAFLEUR	03/07
APPROVED	ED GIERING III	03/07

COVER SHEET & VICINTY MAP
EWP - HURRICANE KATRINA
DSR051-05-027K-RAILROAD CANAL
JEFFERSON PARISH, LOUISIANA

NRCS
Natural Resources Conservation Service
United States Department of Agriculture

FILE NAME
LA051-05-027K-01

DRAWING NAME
LA051-05-027K-01

Sheet 01 of 07

...\LA051-05-027K-01.dgn 4/13/2007 7:58:46 AM

NOTICE:
96 HOURS BEFORE DIGGING
CALL 1-800-272-3020
TO LOCATE UTILITY LINES

ESTIMATED QUANTITES

SITE #	1
EXCAVATION (CY)	394
SIZE #30 RIPRAP (CY)	200
SIZE #57 ROCKFILL (CY)	127
TOP SOIL (CY)	55
GEOTEXTILE (SY)	672
ECRM (SY)	128

		DATE
DESIGNED	RONDA HATHCOCK	03/07
DRAWN	MATTHEW SPRINGER	03/07
CHECKED	CHERIE LAFLEUR	03/07
APPROVED	ED GIERING III	03/07

PROJECT PLAN MAP
EWP - HURRICANE KATRINA
DSR-051-05-027K-RAILROAD CANAL
JEFFERSON PARISH, LOUISIANA

NRCS
Natural Resources Conservation Service
United States Department of Agriculture

FILE NAME
LA051-05-027K-02

DRAWING NAME
LA051-05-027K-02

SHEET 02 of 07

...\LA051-05-027K-02.dgn 8/10/2007 1:50:20 PM

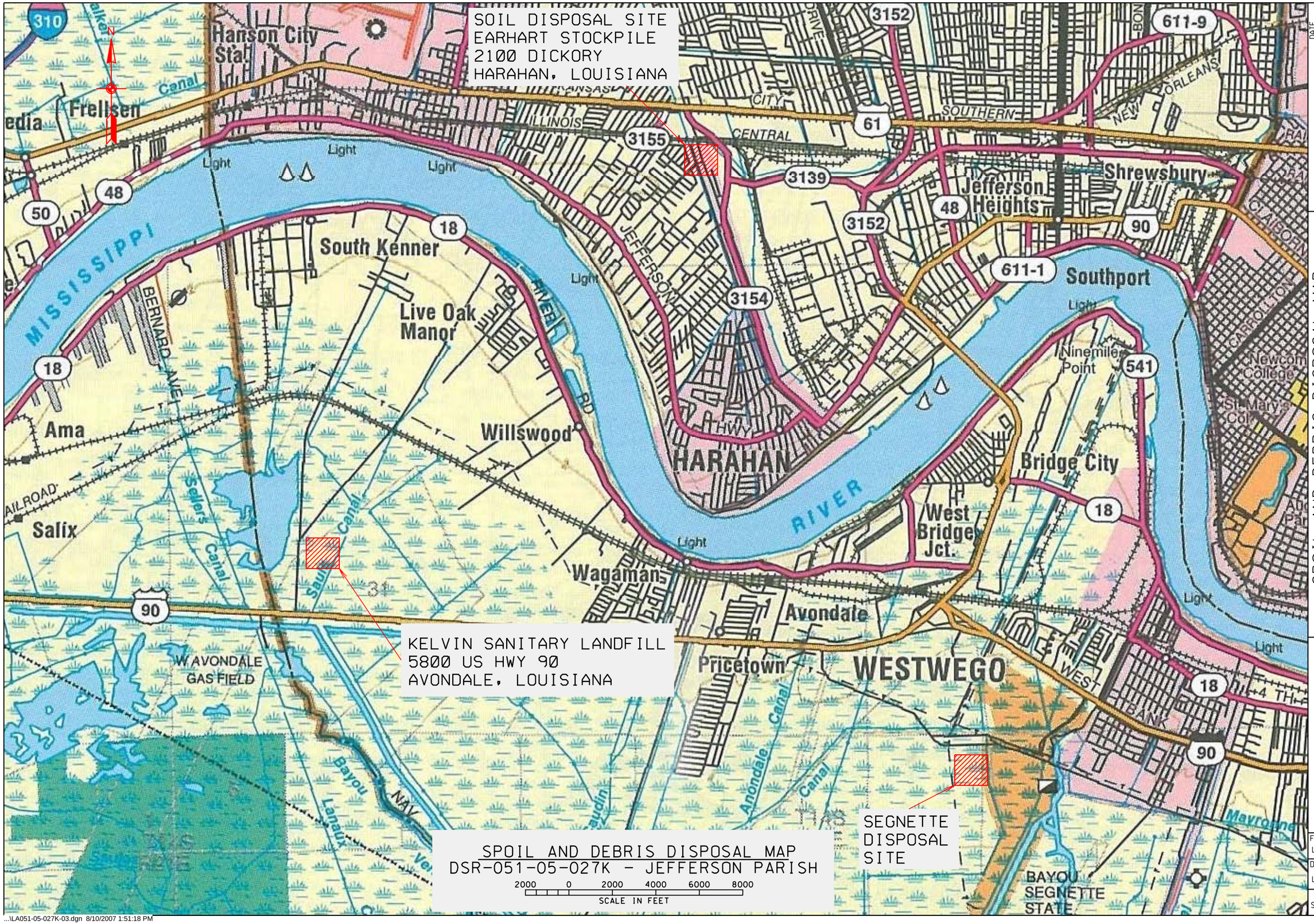

		DATE
DESIGNED	RONDA HATHCOCK	3/07
DRAWN	ABBEY GREMILLION	3/07
CHECKED	CHERIE LAFLEUR	3/07
APPROVED	ED GIERING III	3/07

SPOIL AND DEBRIS DISPOSAL MAP
EWP - HURRICANE KATRINA
DSR051-05-027K-RAILROAD CANAL
JEFFERSON PARISH, LOUISIANA

NRCS
Natural Resources Conservation Service
United States Department of Agriculture

FILE NAME
LA051-05-027K-03

DRAWING NAME
LA051-05-027K-03

Sheet 03 of 07

...\LA051-05-027K-03.dgn 8/10/2007 1:51:18 PM

ROCK SLOPE REPAIR LOCATIONS		
CHANNEL NAME	DSR #	SITES
RAILROAD CANAL	051-05-027K	1

NOTES:

FINAL REPAIR SLOPE SHALL MATCH EXISTING CHANNEL SLOPE ABOVE AND BELOW REPAIR AREA AND BE NO STEEPER THAN _ HORIZONTAL TO 1 VERTICAL

ROCKFILL SHALL MEET THE REQUIREMENTS OF ASTM C-33. SIZE #57 AND SHALL BE A MINIMUM OF 12" THICK

ALL DISTANCES SHOWN AS "VARIES" SHALL BE DETERMINED IN THE FIELD BY THE COTR

NOT TO SCALE

NOTICE:
96 HOURS BEFORE DIGGING
CALL 1-800-272-3020
TO LOCATE UTILITY LINES

RIPRAP GRADATION LA DOTD 30#RIPRAP		
MATERIAL	% LIGHTER BY WEIGHT	WEIGHT OF EACH ROCK (LBS)
RIPRAP	100	125 - 75
	50	75 - 25
	15 MAXIMUM	25 - 6

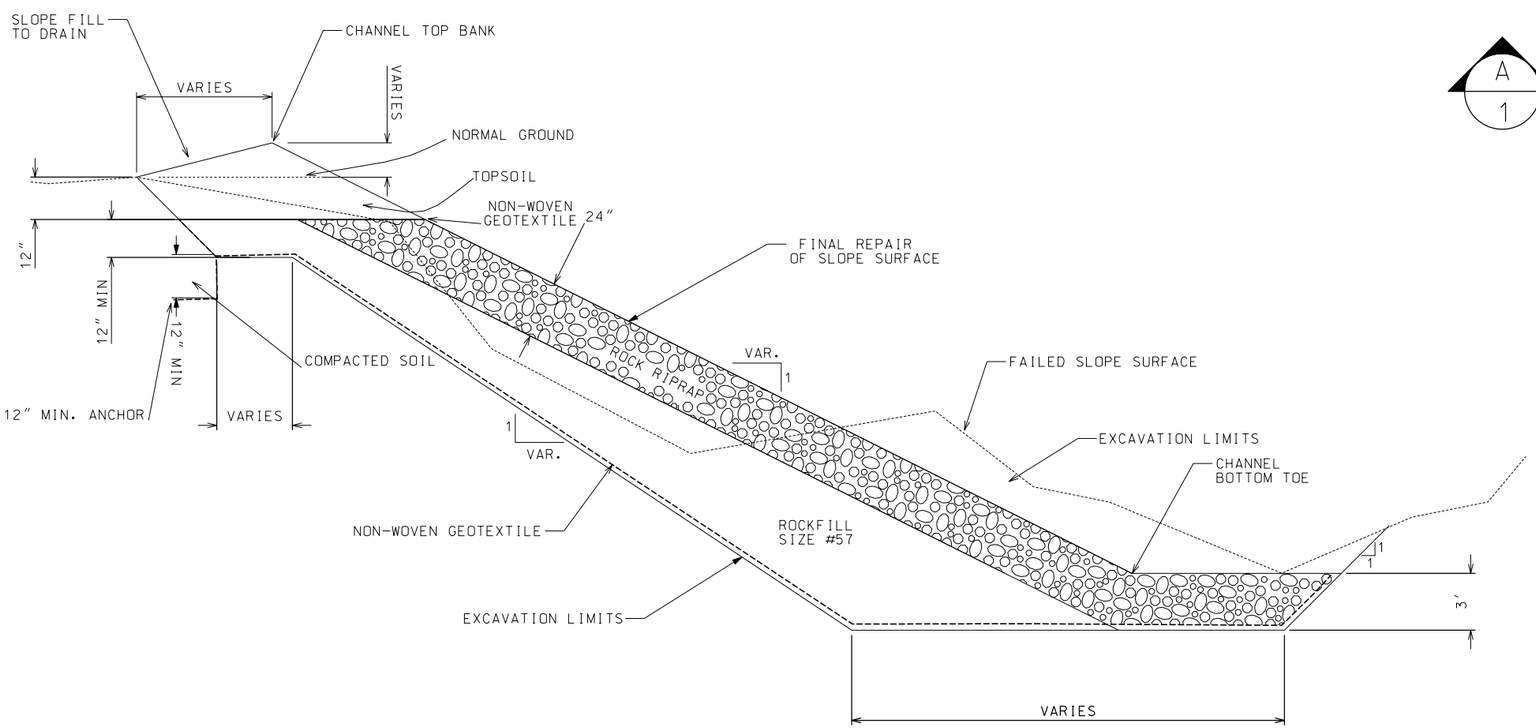

CHANNEL SLOPE REPAIR SECTION A/1

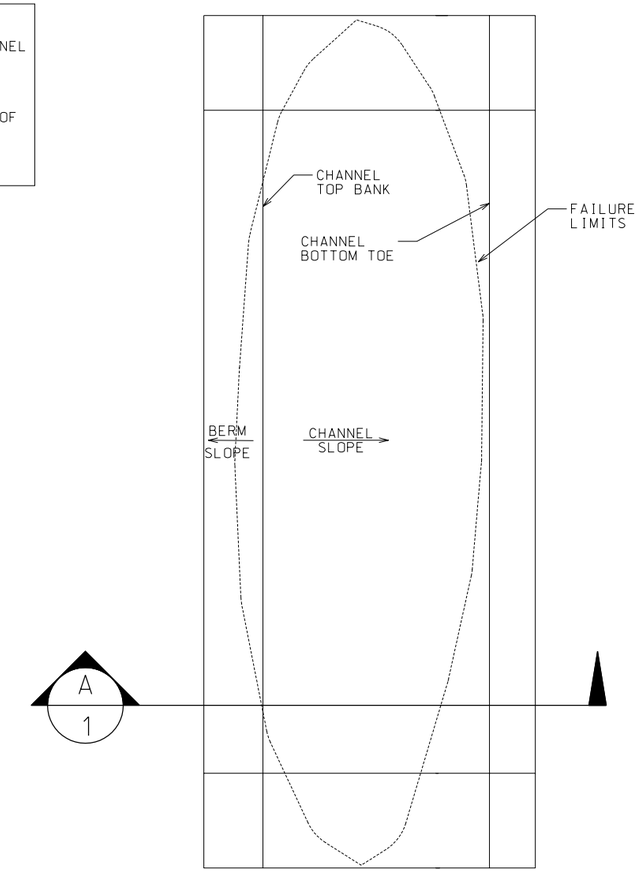

CHANNEL SLOPE REPAIR PLAN

		DATE
DESIGNED	RONDA HATHCOCK	3/07
DRAWN	MATTHEW SPRINGER	3/07
CHECKED	CHERIE LAFLEUR	3/07
APPROVED	E.J. GIERING III	3/07

TYPICAL ROCK CHANNEL SLOPE REPAIR
EWP. HURRICANE KATRINA
DSR-51-05-027K - RAILROAD CANAL
JEFFERSON PARISH, LOUISIANA

NRCS
Natural Resources Conservation Service
United States Department of Agriculture

FILE NAME
LA051-05-027K-04

DRAWING NAME
LA051-05-027K-04

REVISIONS			
NO.	DATE	APPROVED	TITLE

SHEET 04 OF 07

...\LA051-05-027K-04.dgn 8/10/2007 1:52:29 PM

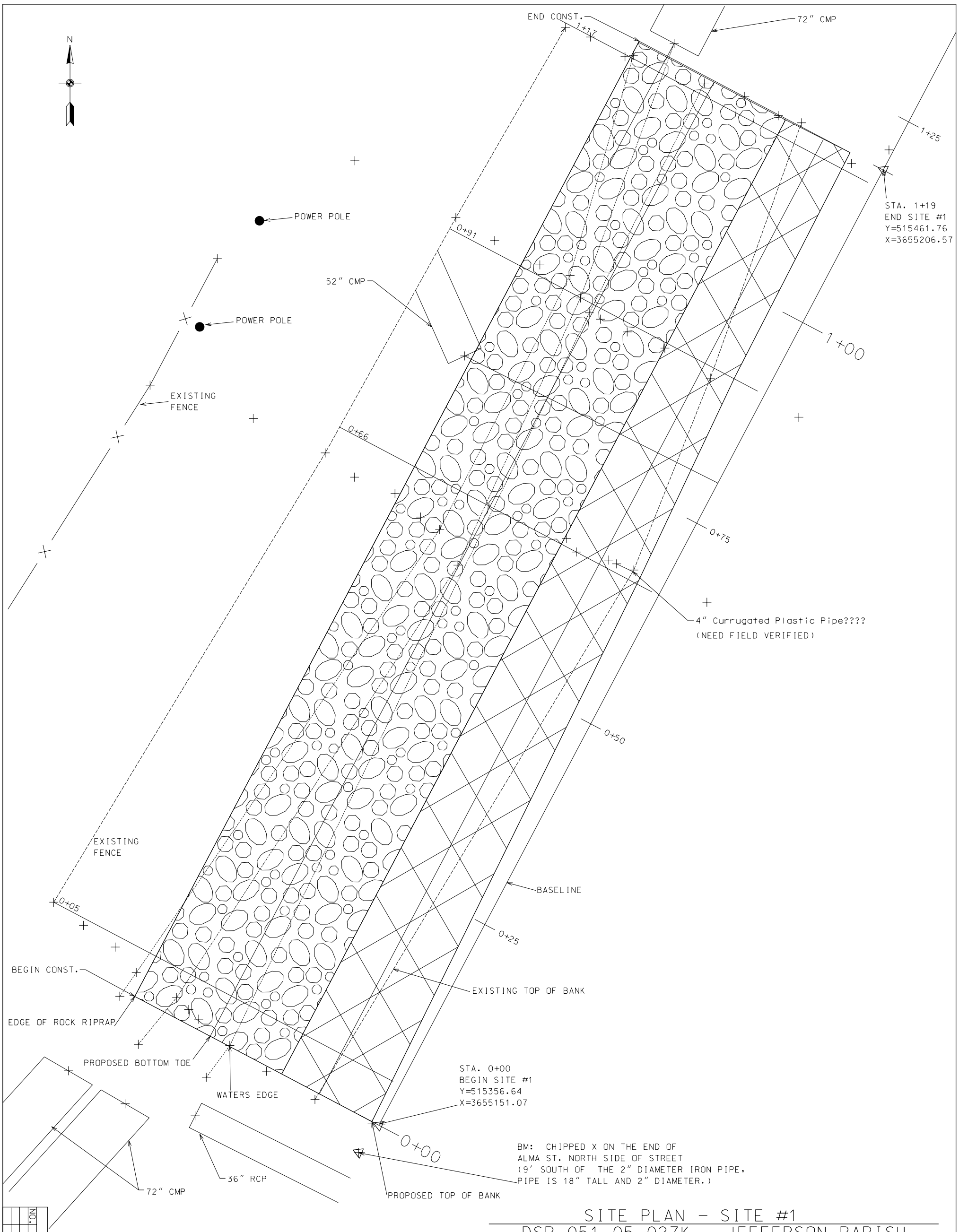

SITE PLAN - SITE #1
DSR-051-05-027K - JEFFERSON PARISH

5 0 5 10 15 20
SCALE IN FEET

REVISIONS			
NO.	DATE	APPROVED	TITLE

Sheet 05 of 07

DRAWING NAME LA051-05-027K-05

FILE NAME LA051-05-027K-05

NRCS
Natural Resources Conservation Service
United States Department of Agriculture

SITE PLAN - SITE # 1
EWP - HURRICANE KATRINA
DSR-051-05-027K-RAILROAD CANAL
JEFFERSON PARISH, LOUISIANA

		DATE
DESIGNED	RONDA HATHCOCK	3/07
DRAWN	MATTHEW SPRINGER	3/07
CHECKED	CHERIE LAFLEUR	3/07
APPROVED	ED GIERING III	3/07

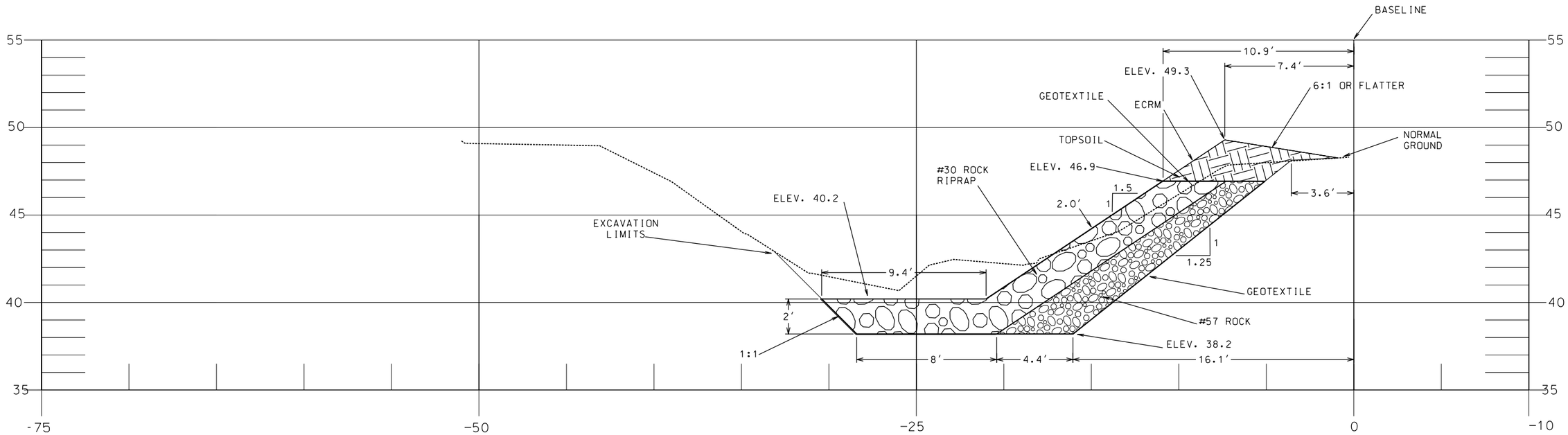

SITES #1 - STA. 0+05

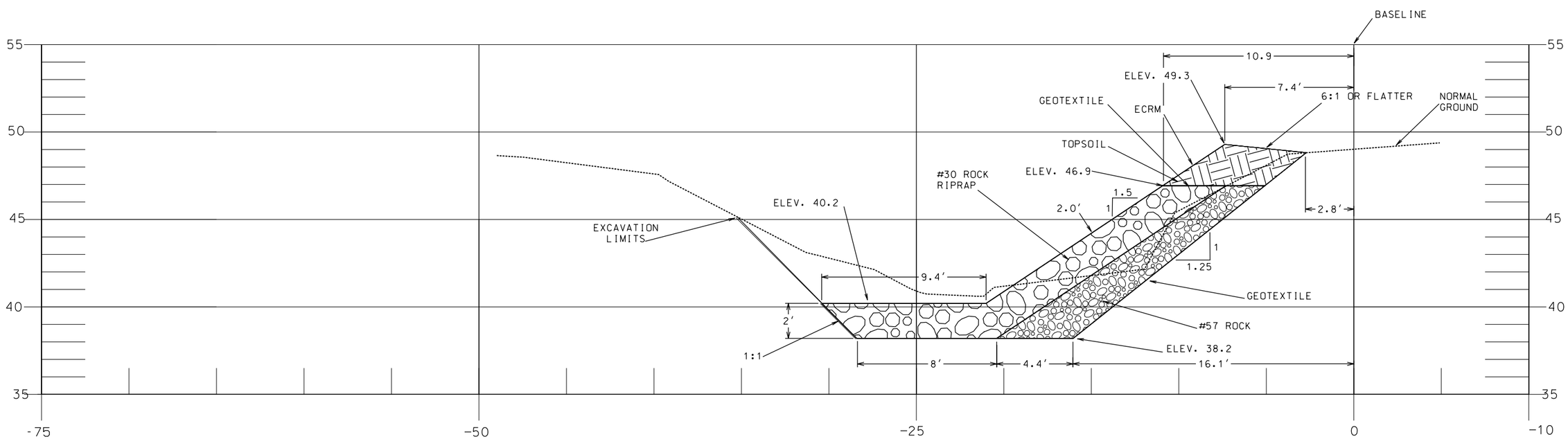

SITE #1 - STA. 0+66

		DATE
DESIGNED	RONDA HATHCOCK	03/07
DRAWN	S. WALTERS	03/07
CHECKED	CHERIE LAFLEUR	03/07
APPROVED	ED GIERING III	03/07

SITE #1-SECTIONS - STA. 0+05 & 0+66
EWP - HURRICANE KATRINA
DSR-051-05-027K-RAILROAD. CANAL
JEFFERSON PARISH, LOUISIANA

NRCS
Natural Resources Conservation Service
United States Department of Agriculture

FILE NAME
LA051-05-027K-06

DRAWING NAME
LA051-05-027K-06

Sheet 06 of 07

...\LA051-05-027K-06.dgn 8/10/2007 1:53:33 PM

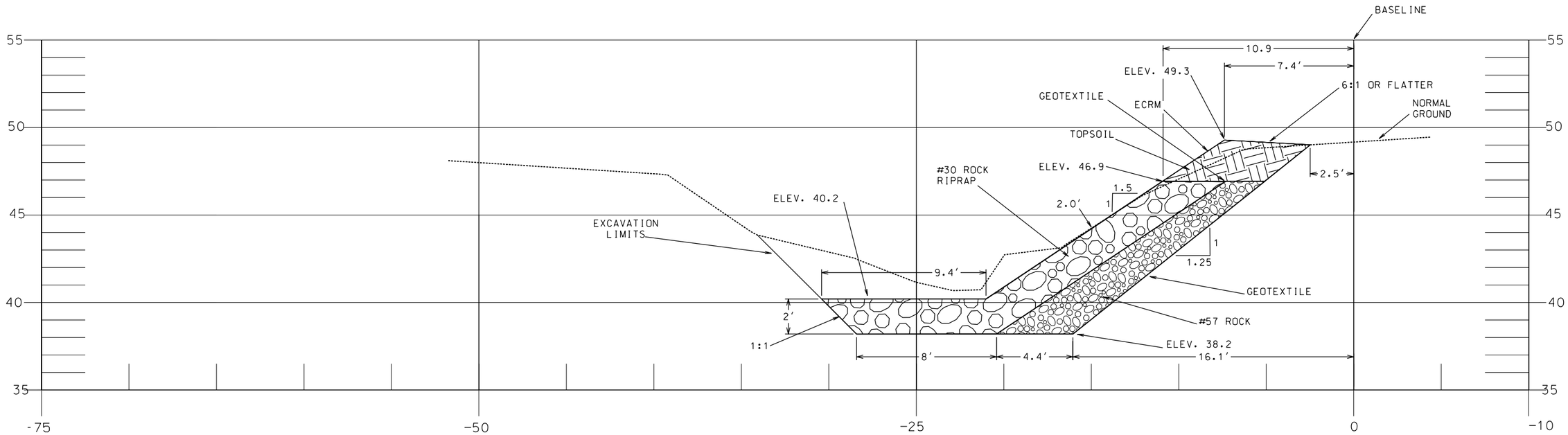

SITE #1 - STA. 0+91

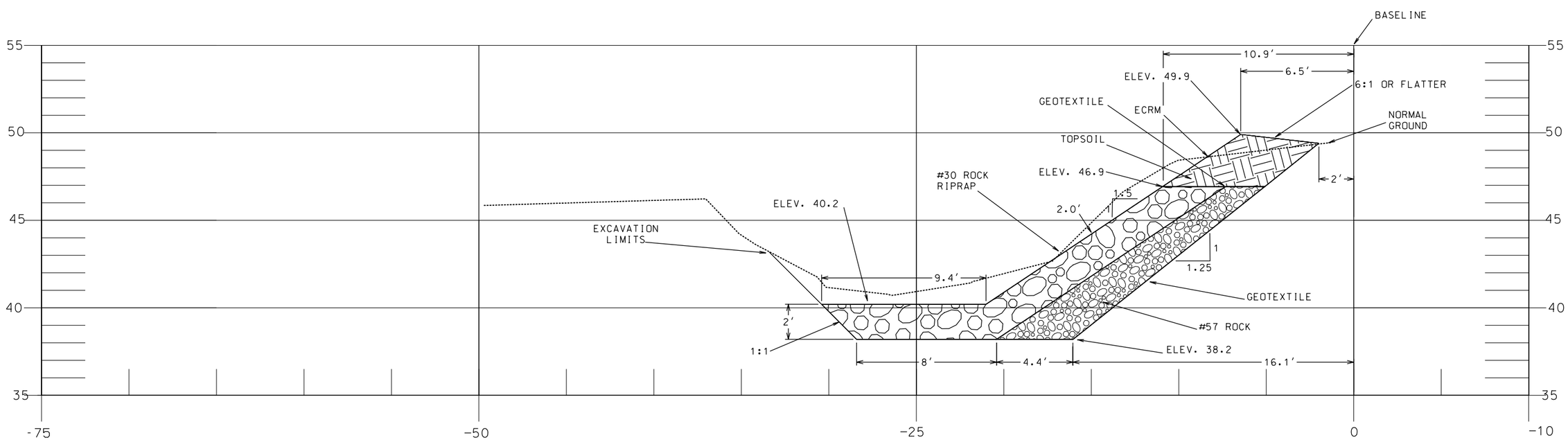

SITE #1 - STA. 1+17

		DATE
DESIGNED	RONDA HATHCOCK	03/07
DRAWN	S. WALTERS	03/07
CHECKED	CHERIE LAFLEUR	03/07
APPROVED	ED GIERING III	03/07

SITE #1-SECTIONS - STA. 0+91 & 1+17
EWP - HURRICANE KATRINA
DSR-051-05-027K-RAILROAD. CANAL
JEFFERSON PARISH, LOUISIANA

NRCS
Natural Resources Conservation Service
United States Department of Agriculture

FILE NAME
LA051-05-027K-07

DRAWING NAME
LA051-05-027K-07

Sheet 07 of 07

...\LA051-05-027K-07.dgn 8/10/2007 1:54:13 PM

PART I - THE SCHEDULE

SECTON B - SUPPLIES OR SEVICES AND PRICE/COSTS

EMERGENCY WATERSHED PROTECTION
JEFFERSON PARISH
JEFFERSON PARISH, LA

DSR -- 051/05/027K
Railroad Canal
Site #1

ITEM#	WORK	SPEC	QTY	UNIT	UNIT PRICE	AMOUNT
1	Mobilization & Demobilization	8	1	JOB	LUMP SUM	$
2	Seeding, Fertilization and Mulching	6	1	JOB	LUMP SUM	$
3	Excavation	21	1	JOB	LUMP SUM	$
4	Earthfill, Topsoil	23	1	JOB	LUMP SUM	$
5	Rockfill	25	1	JOB	LUMP SUM	$
6	Geotextile	95	1	JOB	LUMP SUM	$
7	Rock Riprap	61	5	JOB	LUMP SUM	$

TOTAL BID $ _____

B.2 Award Restrictions (AUG 1987, SCS, AMB) One Award for the aggregate of all items will be made under this solicitation

NOTE 1: Bidder must complete all bid items.

NOTE 2: This bid schedule must be turned in with the offer.

NOTE 3: Bids must be (A) submitted on the forms furnished by the Government or on copies of those forms, and (B) manually signed. The person signing a bid must initial each erasure or change appearing on any bid form.

NOTE 4: Any deviation from the above three notes may result in a bid being disqualified.

Attachments For
Jefferson Parish
DSR # 051-05-027K
Railroad Canal 1

CONSTRUCTION SPECIFICATIONS

NUMBER	TITLE	PAGES	
2	Clearing & Grubbing	2-1	2-3
3	Structure Removal	3-1	3-3
5	Pollution Control	5-1	5-4
6	Seeding, Sprigging, and Mulching	6-1	6-5
8	Mobilization and Demobilization	8-1	8-2
9	Traffic Control	9-1	9-4
11	Removal of Water	11-1	11-3
21	Excavation	21-1	21-5
23	Earthfill	23-1	23-6
25	Rockfill	25-1	25-4
61	Rock Riprap	61-1	61-4
95	Geotextile	95-1	95-4

MATERIAL SPECIFICATIONS

NUMBER	TITLE	PAGES	
302	Coconut Fiber Erosion Control Revegetation Mat	302-1	
523	Rock for Riprap	523-1	523-3
592	Geotextile	592-1	592-3

DRAWINGS 1 of 7 7 of 7

SPECIAL PROVISIONS 1 of 2 2 of 2

SPECIAL PROVISIONS

1. Pipelines and other utilities are not shown on the plans. An effort will be made by Jefferson Parish to locate and mark their utilities prior to the start of construction. It is the responsibility of the contractor to contact LA ONE CALL and the appropriate Jefferson Parish Drainage Superintendent to assist in the location of unmarked utilities prior to the start of his/her work.

   LOUISIANA ONE CALL
   1-800-272-3020

   The East Bank Superintendent contacts are:
   Bill Duplaisir at (504) 736-6642 or
   John Sell at (504) 736-6645

   The West Bank Superintendent contact person is:
   Larry Palmisamo at (504) 349-5159 or
   Lonnie Robinson at (504) 437-4938

2. Unless otherwise specified, the contractor shall be responsible for notifying Jefferson Parish and the respective utility owner(s) to address the protection and/or re-location of utilities within the limits of the work for the duration of the contractor's operations at the project site. The COTR shall concur with any needed adjustments to the proposed work prior to the contractor implementing said adjustments.

3. When performing work in the vicinity of utilities and/or other structures the contractor shall take extreme care not to damage said utilities and/or structures. Any damages resulting from improper construction will be the responsibility of the contractor, and repairs of such damages will be made by the contractor at his/her expense. The contractor shall further restore at his/her own expense all injured property caused by any negligent act of omission or commission on his/her part or on the part of his/her agent, including streets, sidewalks, curbing, sodding, pipes, conduits, shrubs, sewers, buildings, fences, bridges, retaining walls, tanks, power lines, levees or any other building or private property to a condition as good as it was when he/she entered upon the right of way.

4. The convenience of the general public and of residents along the work shall be provided for in a reasonably adequate and satisfactory manner. Where existing roads are not available for use as detours, unless otherwise provided, all traffic shall be permitted to pass through the work. In such cases the vehicles of the traveling public shall have precedence over contractor's vehicles to the end that the traveling public's vehicles shall not be unduly delayed for the convenience of the contractor. In order that all unnecessary delays to the traveling public may be avoided, the contractor shall provide and station competent flagmen whose sole duties shall consist of directing and controlling the movement of public traffic either through or around the work. A flagman shall also be stationed wherever equipment, trucks, etc., enter or leave a thoroughfare from the construction area. No road shall be closed by the contractor to the public except as called for in the specification.

5. The contractor shall arrange his work so that no undue or prolonged blocking of business establishments or private resident will occur. Materials and equipment stored on the right of way or project site shall be so placed and the work at all times shall be so conducted as to insure minimum danger and obstruction to the traveling public.

6. When transporting equipment, supplies and material to and from the construction site, the contractor shall take the most direct route when leaving a major thoroughfare.

7. Fire hydrants shall be accessible at all times to the Fire Department. No materials or other obstructions shall be placed closer to a fire hydrant than permitted by ordinances, rules or regulations or within fifteen (15) feet of a fire hydrant, in the absence of such ordinances, rules or regulations.

8. Material Certifications shall be provided to the Contracting Officer for all materials used in this contract prior to installation.

9. The following applies to the payment for excavation, rockfill, earthfill, geotextile, rock riprap, and mulching. The Estimated Quantities shown on the drawings are based on quantities derived from preliminary survey data and are calculated to the finished neat lines and grades on the plans. Variations in these quantities may be possible when the work is actually performed. However, modification to the contract will not be made for work performed in excess of these estimated quantities except under the following conditions:
    i) The variation must exceed 15% more than the estimated quantity or have a minimum contract value for the additional work in excess of $500.00. (The contract value is to be determined by dividing the lump sum amount in the Bid Schedule by the total applicable estimated units as shown in the contract item tables of quantities.) If the variation exceeds 15% more than the estimated quantity or $500.00, a price adjustment can be made for the amount exceeding 15% or $500.00 more than the original estimated quantity.
    ii) It shall be the contractor's responsibility to submit proof that the quantity in question exceeds the percentage and cost parameters in above Item i. Proof will consist of applicable survey data or other measurements made by a Registered Professional Engineer or Land Surveyor in accordance with recognized professional practice and standards of the surveying profession.
    iii) The survey data or other measurements as applicable shall be presented to the Natural Resources Conservation Service (NRCS) prior to any work on the contract item for which the quantity is questioned. One working day shall be provided to the NRCS to verify data prior to the beginning of work for this contract item.
    A final survey or other measurements as applicable shall be made and presented to the NRCS after the work is completed, which will allow measurement for the quantity in question. If this survey data indicates justification for a contract modification within the parameters of above Item i, it shall be made in accordance with the contract terms and conditions.
    All computations for excavation and fill items shall be computed to the neat lines and grades as shown on the drawings.

10. Soil borings and survey data is available for viewing at the Natural Resources Conservation Service, Emergency Operations Center, 2420 Athania Pkwy, Suite 300, Metairie, Louisiana 70001. Contact the Contract Specialist at 504-828-1866 Ext. 4 to schedule an appointment.

11. Unless otherwise concurred by the COTR, when a project for slope repair/stabilization consists of several sites along the same reach of channel, the contractor shall "work his way out of the project". The work shall begin at the site located the greatest travel distance from the project's entry point off a public road and proceed back towards the entry point. For example, if the access to the channel is off a public road at the north end of the project then the work shall begin at the southernmost site and proceed north. All slope repair work will be conducted to minimize the temporary storage of excavated material and backfill materials above the slope being repaired.

12. Unless otherwise concurred by the COTR, when a project consists of several slope repair/stabilization sites along a channel or canal, the contractor shall complete 80% of all the work at a site prior to beginning any work at the next site.

Construction Specification 2—Clearing and Grubbing

1. Scope

The work consists of clearing and grubbing and disposal of trees, snags, logs, brush, stumps, shrubs, and rubbish from the designated areas.

2. Protection of existing vegetation

Trees and other vegetation designated to remain undisturbed shall be protected from damage throughout the duration of the construction period. Any damages resulting from the contractor's operations or neglect shall be repaired by the contractor.

Earthfill, stockpiling of materials, vehicular parking, and excessive foot or vehicular traffic shall not be allowed within the drip line of vegetation designated to remain in place. Vegetation damaged by any of these or similar actions shall be replaced with viable vegetation of the same species, similar condition, and like size unless otherwise approved by the contracting officer.

Any cuts, skins, scrapes, or bruises to the bark of the vegetation shall be carefully trimmed and local nursery accepted procedures used to seal damaged bark.

Any limbs or branches 0.5 inch or larger in diameter that are broken, severed, or otherwise seriously damaged during construction shall be cut off at the base of the damaged limb or branch flush with the adjacent limb or tree trunk. All roots 1-inch or larger in diameter that are cut, broken, or otherwise severed during construction operations shall have the end smoothly cut perpendicular to the root. Roots exposed during excavation or other operations shall be covered with moist earth or backfilled as soon as possible to prevent the roots from drying out.

3. Marking

The limits of the area(s) to be cleared and grubbed will be marked by stakes, flags, tree markings, or other suitable methods. Trees to be left standing and uninjured will be designated by special markings placed on the trunk about 6 feet above the ground surface.

4. Clearing and grubbing

All trees not marked for preservation and all snags, logs, brush, stumps, shrubs, rubbish, and similar materials shall be cleared from within the limits of the designated areas. Unless otherwise specified, all stumps, roots, and root clusters that have a diameter of 1 inch or larger shall be grubbed out to a depth of at least 2 feet below subgrade for concrete structures and 1 foot below the ground surface at embankment sites and other designated areas.

5. Disposal

All materials cleared and grubbed from the designated areas shall be disposed of at locations shown on the drawings or in a manner specified in section 7. The contractor is responsible for complying with all local rules and regulations and the payment of any and all fees that may result from disposal at locations away from the project site.

6. Measurement and payment

***Method 1*—**For items of work for which specific units prices are established in the contract, the cleared and grubbed area is measured to the nearest 0.1 acre. Payment for clearing and grubbing is made for the total area within the designated limits at the contract unit price. Such payment will constitute full compensation for all labor, equipment, tools, and all other items necessary and incidental to the completion of the work.

***Method 2*—**For items of work for which specific unit prices are established in the contract, the length of the cleared and grubbed area is measured to the nearest full station (100 feet) along the line designated on the drawing or identified in the specifications. Payment for clearing and grubbing is made for the total length within the designated limits at the contract unit price. Such payment will constitute full compensation for all labor, equipment, tools, and all other items necessary and incidental to the completion of the work.

***Method 3*—**For items of work for which specific unit prices are established in the contract, each tree, stump, and snag having a diameter of 4 inches or larger and each log having a diameter of 4 inches or larger and a length of 10 feet are measured before removal. The size of each tree and snag is determined by measuring its trunk at breast height above the natural ground surface. The size of each log is determined by measuring the butt and by measuring its length from butt to tip. The size of each stump is measured at the top. Diameter is determined by dividing the measured circumference by 3.14.

Payment for clearing and grubbing of each tree, stump, and snag having a diameter of 4 inches or larger and each log having a diameter of 4 inches or larger and a length of 10 feet or larger is made at the contract unit price for its size designation as determined by the following schedule:

Measured diameter (in)	Size designation (in)
4 to 8	6
8 to 12	10
12 to 24	18
24 to 36	30
36 to 60	48
Over 60	60

The sum of such payments shall constitute full compensation for clearing and grubbing (including the clearing and grubbing of smaller trees, stumps, snags, logs, brush, shrubs, and roots), applicable permits and associated fees, and rubbish removal. Such payment shall constitute full compensation for all labor, equipment, tools, and all other items necessary and incidental to the completion of the work.

***Method 4*—**For items of work for which specific lump sum prices are established in the contract, payment for clearing and grubbing is made at the contract lump sum price. Such payment shall constitute full compensation for all labor, equipment, tools, and all other items necessary and incidental to the completion of the work.

***All Methods*—**The following provisions apply to all methods of measurement and payment. Compensation for any item of work described in the contract, but not listed in the bid schedule will be included in the payment for the item of work to which it is made subsidiary. Such items and the items to which they are made subsidiary are identified in section 7.

7. Items of work and construction details

7. Items of work and construction details

Items of work to be performed in conformance with this specification and the construction details therefore are:

a. Subsidiary Item, Clearing and Grubbing

(1) This item shall consist of clearing and grubbing the construction area as necessary to do the repair work as shown on the construction drawings and as called for by the Specifications.

(2) All cleared materials and debris (trees, stumps, brush, broken concrete, and other foreign materials), above and below the ground surface, shall be removed from the repair site to the extent necessary to perform the work.

(3) All cleared materials and debris shall be loaded and hauled to the nearest approved public landfill, that meets all State and Federal requirements. The contractor is responsible for payment of any tipping fees.

(4) No separate payment will be made for this item. Compensation for Subsidiary Item, "Clearing & Grubbing" will be included in the payment for Bid Item 3, Excavation.

Construction Specification 3—Structure Removal

1. Scope
The work shall consist of the removal, salvage, and disposal of structures (including fences) from the designated areas.

2. Marking
***Method 1*—**Each structure or structure part to be removed will be marked with stakes, flags, paint, or other suitable method.

***Method 2*—**The area boundaries from which structures must be removed will be marked using stakes, flags, paint, or other suitable method. Structures to remain undisturbed or to be salvaged will be designated by special markings.

3. Removal
***Method 1*—**All structures designated for removal in the contract shall be removed to the specified extent and depth.

***Method 2*—**Within the areas so marked, all visible and buried structures identified shall be removed to the specified extent and depth.

4. Salvage
Structures or structure parts that are designated to be salvaged shall be carefully removed and neatly placed in the specified or approved storage location. Salvaged structures that are capable of being disassembled shall be dismantled into individual members or sections. Such structures shall be neatly and systematically match marked with paint before disassembly. All connectors and other parts shall be marked to indicate their proper location within the structure and shall be fastened to the appropriate structural member or packed in suitable containers.

Material from fences designated to be salvaged shall be placed outside the work area on the property on which the fence was originally located. Fence wire shall be rolled into uniform rolls of suitable size and neatly piled with other salvaged materials. Posts and rails shall be neatly stacked.

5. Disposal of refuse materials
Refuse materials resulting from structure removal shall be disposed of in a manner and at locations specified in section 7 of this specification or in an acceptable manner and at locations approved by the contracting officer. Disposal by burning shall be in accordance with local rules and regulations.

6. Measurement and payment
***Method 1*—**For items of work for which specific unit prices are established by the contract, payment for the removal of each structure unit, except fences, is made at the contract unit price. Fences removed or removed and salvaged are measured to the nearest linear foot. Payment for fence removal or removal and salvage is made at the contract unit prices for each type and size of fence.

Such payment will constitute full compensation for all labor, equipment, tools, applicable permits and associated fees for burning and disposal of refuse, and all other items necessary and incidental to the completion of the work.

***Method 2*—**For items of work for which specific lump sum prices are established by the contract, payment for structure removal is made at the contract lump sum price.

Such payment will constitute full compensation for all labor, equipment, tools, applicable permits and associated fees for burning and disposal of refuse, and all other items necessary and incidental to the completion of the work.

***All Methods*—**The following provisions apply to all methods of measurement and payment. Compensation for any item of work described in the contract, but not listed as a contract line item number in the bid schedule, is included in the payment for the item of work to which it is made subsidiary. Such items and items to which they are made subsidiary are identified in section 7 of this specification.

7. Items of work and construction details

7. Items of work and construction details

Items of work to be performed in conformance with this specification and the construction details therefore are:

a. Subsidiary Item, Structure Removal

1) This item shall consist of removal and disposal of steel sheet piles, timber toewalls, corrugated metal pipe and plastic pipe to the extent shown on the drawings.
2) Existing pipes shall be fully supported before the removal of the existing pipe supports.
3) Marking shall be by Method 1. Each structure to be removed will be marked by means of stakes, flags, painted markers or other suitable methods by the COTR.
4) Removal shall be by Method 2. The extent of depth of removal shall be that required to complete the repair as shown on the drawings.
5) While no existing timber toe walls were detected during the inspection process if any are encountered during construction the extent of depth of removal shall be that required to complete the repair as shown on the drawings. The depth of removal of the timber toe wall shall be as a minimum of 1' below the excavation limits at the site.
6) Salvaging of materials will not be required.
7) Refuse material resulting from structure removal shall be loaded and hauled to the nearest approved public landfill, that meets all State and Federal requirements.
8) No separate payment will be made for this item. Compensation for Subsidiary Item, "Structure Removal" will be included in the payment for Bid Item 3, Excavation.

Construction Specification 5—Pollution Control

1. Scope

The work consists of installing measures or performing work to control erosion and minimize the production of sediment and other pollutants to water and air from construction activities.

2. Material

All material furnished shall meet the requirements of the material specifications listed in section 8 of this specification.

3. Erosion and sediment control measures and works

The measures and works shall include, but are not limited to, the following:

Staging of earthwork activities—The excavation and moving of soil materials shall be scheduled to minimize the size of areas disturbed and unprotected from erosion for the shortest reasonable time.

Seeding—Seeding to protect disturbed areas shall occur as soon as reasonably possible following completion of that earthwork activity.

Mulching—Mulching to provide temporary protection of the soil surface from erosion.

Diversions—Diversions to divert water from work areas and to collect water from work areas for treatment and safe disposition. They are temporary and shall be removed and the area restored to its near original condition when the diversions are no longer required or when permanent measures are installed.

Stream crossings—Culverts or bridges where equipment must cross streams. They are temporary and shall be removed and the area restored to its near original condition when the crossings are no longer required or when permanent measures are installed.

Sediment basins—Sediment basins collect, settle, and eliminate sediment from eroding areas from impacting properties and streams below the construction site(s). These basins are temporary and shall be removed and the area restored to its original condition when they are no longer required or when permanent measures are installed.

Sediment filters—Straw bale filters or geotextile sediment fences trap sediment from areas of limited runoff. Sediment filters shall be properly anchored to prevent erosion under or around them. These filters are temporary and shall be removed and the area restored to its original condition when they are no longer required or when permanent measures are installed.

Waterways—Waterways for the safe disposal of runoff from fields, diversions, and other structures or measures. These works are temporary and shall be removed and the area restored to its original condition when they are no longer required or when permanent measures are installed.

Other—Additional protection measures as specified in section 8 of this specification or required

by Federal, State, or local government.

4. Chemical pollution

The contractor shall provide watertight tanks or barrels or construct a sump sealed with plastic sheets to dispose of chemical pollutants, such as drained lubricating or transmission fluids, grease, soaps, concrete mixer washwater, or asphalt, produced as a by-product of the construction activities. At the completion of the construction work, sumps shall be removed and the area restored to its original condition as specified in section 8 of this specification. Sump removal shall be conducted without causing pollution.

Sanitary facilities, such as chemical toilets, or septic tanks shall not be located next to live streams, wells, or springs. They shall be located at a distance sufficient to prevent contamination of any water source. At the completion of construction activities, facilities shall be disposed of without causing pollution as specified in section 8 of this specification.

5. Air pollution

The burning of brush or slash and the disposal of other materials shall adhere to state and local regulations.

Fire prevention measures shall be taken to prevent the start or spreading of wildfires that may result from project activities. Firebreaks or guards shall be constructed and maintained at locations shown on the drawings.

All public access or haul roads used by the contractor during construction of the project shall be sprinkled or otherwise treated to fully suppress dust. All dust control methods shall ensure safe construction operations at all times. If chemical dust suppressants are applied, the material shall be a commercially available product specifically designed for dust suppression and the application shall follow manufacturer's requirements and recommendations. A copy of the product data sheet and manufacturer's recommended application procedures shall be provided to the engineer 5 working days before the first application.

6. Maintenance, removal, and restoration

All pollution control measures and temporary works shall be adequately maintained in a functional condition for the duration of the construction period. All temporary measures shall be removed and the site restored to near original condition.

7. Measurement and payment

Method 1—For items of work for which specific unit prices are established in the contract, each item is measured to the nearest unit applicable. Payment for each item is made at the contract unit price for that item. For water or chemical suppressant items used for dust control for which items of work are established in section 8 of this specification, measurement for payment will not include water or chemical suppressants that are used inappropriately or excessive to need. Such payment will constitute full compensation for the completion of the work.

Method 2—For items of work for which lump sum prices are established in the contract, payment is made as the work proceeds and supported by invoices presented by the contractor that reflect actual costs. If the total of all progress payments is less than the lump sum contract price for this item, the balance remaining for this item will be included in the final contract payment. Payment of the lump sum contract price will constitute full compensation for completion of the

work.

Method 3—For items of work for which lump sum prices are established in the contract, payment will be prorated and provided in equal amounts on each monthly progress payment estimate. The number of months used for prorating shall be the number estimated to complete the work as outlined in the contractor's approved construction schedule. The final month's prorate amount will be provided with the final contract payment. Payment as described will constitute full compensation for completion of the work.

All Methods—The following provisions apply to all methods of measurement and payment. Compensation for any item of work described in the contract, but not listed in the bid schedule is included in the payment for the item of work to which it is made subsidiary. Such items, and the items to which they are made subsidiary, are identified in section 8 of this specification.

8. Items of work and construction details

(See next page.)

8. Items of work and construction details

Items of work to be performed in conformance with this specification and the construction details therefor are:

a. Subsidiary Item, Pollution Control

(1) This item shall consist of all work necessary to control erosion and sediment pollution, chemical pollution, water pollution, and air pollution during the period of this contract. The contractor shall perform the work in a manner that will reduce erosion, minimize sediments and other pollutants to the water and streams, and create a minimum of air pollution.

(2) Silt fences and hay bales shall be installed in the locations necessary to prevent sediment from leaving the construction site.

(3) All paints and hazardous materials shall be kept in the original containers and tightly sealed with the manufacturer's label attached. These must be properly stored when not in use. They shall also be stored in a neat orderly manner in their original containers. Disposal of surplus materials shall be in accordance with the manufacturer's or State and Local regulations and recommended methods. Containers shall be empty before disposal.

(4) Petroleum products such as fuels and lubricants will be stored in tightly sealed containers that are clearly labeled. The storage and dispensing of all petroleum products will be in accordance with part 1926.152 of the OSHA Construction Industry Safety and Health Standards. All spills will be cleaned up on the same workday of the spill occurrence or whenever discovered.

(5) Soils contaminated with petroleum products will be removed from the site and disposed of in accordance with State and Local regulations.

(6) All onsite vehicles and equipment shall be monitored for leaks and receive regular preventive maintenance to reduce the chance for leakage. Leaks shall be repaired as soon as they are identified.

(7) Sumps used to control chemical pollution shall be sealed with plastic sheets having a minimum thickness of 20 mils.

(8) The contractor shall anchor all temporary materials used for pollution control in such a manner to prevent its being transported off the worksite by storm runoff water. Damage caused by clogging of downstream bridges and/or culverts by such temporary materials being transported downstream by storm water shall be the responsibility of the contractor.

(9) No separate payment will be made for this item. Compensation for Subsidiary Item, Pollution Control will be included in the payment for Bid Item 2, Seeding, Fertilization and Mulching.

Construction Specification 6—Seeding, Sprigging, and Mulching

1. Scope

The work consists of preparing the area for treatment; furnishing and placing seed, sprigs, mulch, fertilizer, inoculant, lime, and other soil amendments; and anchoring mulch in designated areas as specified.

2. Material

Seed—All seed shall conform to the current rules and regulations of the state where it is being used and shall be from the latest crop available. It shall meet or exceed the standard for purity and germination listed in section 7.

Seed shall be labeled in accordance with the state laws and the U.S. Department of Agriculture rules and regulations under the Federal Seed Act in effect on the date of invitations for bids. Bag tag figures are evidence of purity and germination. No seed will be accepted with a test date of more than 9 months before the delivery date to the site.

Seed that has become wet, moldy, or otherwise damaged in transit or storage will not be accepted. The percent of noxious weed seed allowable shall be as defined in the current State laws relating to agricultural seeds. Each type of seed shall be delivered in separate sealed containers and fully tagged unless exception is granted in writing by the contracting officer.

Fertilizer—Unless otherwise specified, the fertilizer shall be a commercial grade fertilizer. It shall meet the standard for grade and quality specified by State law. Where fertilizer is furnished from bulk storage, the contractor shall furnish a supplier's certification of analysis and weight. When required by the contract, a representative sample of the fertilizer shall be furnished to the contracting officer for chemical analysis.

Inoculants—The inoculant for treating legume seeds shall be a pure culture of nitrogen-fixing bacteria prepared specifically for the species and shall not be used later than the date indicated on the container or as otherwise specified. A mixing medium, as recommended by the manufacturer, shall be used to bond the inoculant to the seed. Two times the amount of the inoculant recommended by the manufacturer shall be used except four times the amount shall be used when seed is applied using a hydraulic seeder. Seed shall be sown within 24 hours of treatment and shall not remain in the hydraulic seeder longer than 4 hours.

Lime and other soil amendments—Lime shall consist of standard ground agriculture limestone, or approved equivalent. Standard ground agriculture limestone is defined as ground limestone meeting current requirements of the State Department of Agriculture. Other soil amendments shall meet quality criteria and application requirements specified in section 7.

Mulch tackifiers—Asphalt emulsion tackifiers shall conform to the requirements of ASTM D 977, Specification for Emulsified Asphalt. The emulsified asphalt may be rapid setting, medium setting, or slow setting. Nonasphaltic tackifiers required because of environmental considerations shall be as specified in section 7.

Straw mulch material—Straw mulch shall consist of wheat, barley, oat or rye straw, hay, grass cut from native grasses, or other plants as specified in section 7. The mulch material shall be air-

dry, reasonably light in color, and shall not be musty, moldy, caked, or otherwise of low quality. The use of mulch that contains noxious weeds is not permitted. The contractor shall provide a method satisfactory to the contracting officer for determining weight of mulch furnished.

Other mulch materials—Mulching materials, such as wood cellulose fiber mulch, mulch tackifiers, synthetic fiber mulch, netting, and mesh, are other mulching materials that may be required for specialized locations and conditions. These materials, when specified, must be accompanied by the manufacturer's recommendations for methods of application.

3. Seeding mixtures, sod, sprigs, and dates of planting

The application rate per acre for seed mixtures, sprigs, or sod and date of seeding or planting shall be as shown on the plans or as specified in section 7.

4. Seedbed preparation and treatment

Areas to be treated shall be dressed to a smooth, firm surface. On sites where equipment can operate on slopes safely, the seedbed shall be adequately loosened (4 to 6 inches deep) and smoothed. Depending on soil and moisture conditions, disking or cultipacking, or both, may be necessary to properly prepare a seedbed. Where equipment cannot operate safely, the seedbed shall be prepared by hand methods by scarifying to provide a roughened soil surface so that broadcast seed will remain in place.

If seeding is to be accomplished immediately following construction operations, seedbed preparation may not be required except on a compacted, polished, or freshly cut soil surface.

Rocks larger than 6 inches in diameter, trash, weeds, and other debris that will interfere with seeding or maintenance operations shall be removed or disposed of as specified in section 7.

Seedbed preparation shall be discontinued when soil moisture conditions are not suitable for the preparation of a satisfactory seedbed as determined by the contracting officer's technical representative (COTR).

5. Seeding, sprigging, fertilizing, mulching, and stabilizing

All seeding or sprigging operations shall be performed in such a manner that the seed or sprigs are applied in the specified quantities uniformly in the designated areas. The method and rate of seed application shall be as specified in section 7. Unless otherwise specified, seeding or sprigging shall be accomplished within 2 days after final grading is completed and approved.

Fertilizer, lime, and other soil amendments shall be applied as specified in section 7. When specified, the fertilizer and soil amendments shall be thoroughly incorporated into the soil immediately following surface application.

The rate, amount, and kind of mulching or mesh shall be as specified in section 7. Mulches shall be applied uniformly to the designated areas. They shall be applied to areas seeded not later than 2 working days after seeding has been performed. Straw mulch material shall be stabilized within 24 hours of application using a mulch crimper or equivalent anchoring tool or by a suitable tackifier. When the mulch crimper or equivalent anchoring tool is used, it shall have straight blades and be the type manufactured expressly for and capable of firmly punching the mulch into the soil. Where the equipment can be safely operated, it shall be operated on the contour. Hand methods shall be used where equipment cannot safely operate to perform the work required.

The tackifier shall be applied uniformly over the mulch material at the specified rate, or it shall be injected into the mulch material as it is being applied. Mesh or netting stabilizing materials shall be applied smoothly, but loosely on the designated areas. The edges of these materials shall be buried or securely anchored using spikes or staples as specified in section 7.

The contractor shall maintain the mesh or netting areas until all work under the contract has been completed and accepted. Maintenance shall consist of the repair of areas damaged by water erosion, wind, fire, or other causes. Such areas shall be repaired to reestablish the intended condition and to the design lines and grades required by the contract. The areas shall be refertilized, reseeded, and remulched before the new application of the mesh or netting.

6. Measurement and payment

Method 1—For items of work for which specific unit prices are established in the contract, each area treated is measured as specified in section 7 and the area calculated to the nearest 0.1 acre. Payment for treatment is made at the contract unit price for the designated treatment, which will constitute full compensation for completion of the work.

When specified as an item of work, mesh or netting is measured to the nearest square yard of surface area covered and accepted. Payment is made at the contract unit price and will constitute full compensation for completion of the work.

Method 2—For items of work for which specific lump sum prices are established in the contract, the quantity of work will not be measured for payment. Payment for this item is made at the contract lump sum price for the item and will constitute full compensation for the completion of the work.

Method 3—For items of work for which lump sum prices are established in the contract, payment is made as the work proceeds. Progress payments will be determined as specified in section 7. Payment of the lump sum contract price will constitute full compensation for completion of the work.

All Methods—The following provisions apply to all methods of measurement and payment. Compensation for any item of work described in the contract, but not listed in the bid schedule is included in the payment for the item of work to which it is made subsidiary. Such items and the item(s) to which they are made subsidiary are identified in section 7.

7. Items of work and construction details

(See next sheet)

7. Items of work and construction details

Items of work to be performed in conformance with this specification and the construction details therefore are:

a. Bid Item 2, Seeding, Fertilization, and Mulching

1) This item will consist of furnishing and applying seeds, fertilizer, and mulch according to the following specifications:

2) Seeding

a) Seeding will be done on all bare areas such as channel slopes, berms, spoil placement areas, access routes, and any other disturbed areas. Seed will not be applied to areas with perennial ponded water.

b) No seedbed preparation will be required if the construction equipment has produced a scarified surface and the seeding is done the day the areas to be seeded are worked. If the construction equipment has produced a slick surface, or seeding is not done the day the areas are worked, a seedbed will be prepared by scarifying the soil surface with a spike-tooth harrow or similar implement to a depth of one (1) inch. When more than one species of seed is required, each species shall be seeded separately. Seeds will be applied at the following rates:

Seeding Period	**Species**	**Minimum % Pure Live Seed**	**Pure Live Seed (lb./ac)**
Mar 1 - Aug 31	Common Bermuda-grass (hulled)	83	45
Sep 1 - Dec 31	Tall Fescue	80	40
Jan 1 - Feb 28	Common Bermuda-grass(unhulled) and Common Bermuda-grass (hulled) and Rye Grass	80 83 82	20 20 25

3) Fertilization

a) Fertilizer will be applied to all areas to be seeded.

b) Fertilizer will be a 1-1-1 ratio of N, P2O5, and K2O, and will contain at least 13 lbs. of each per 100 lbs. of material.

Fertilizer rate (13-13-13 basis)	(14 lbs. per 1000 sq ft) or (600 lbs. per acre)

c) One application of fertilizer will be applied at the time of planting as directed by the COTR.

4) Temporary Seeding

a) This item will consist of furnishing and applying temporary seed and fertilizer.

b) Seeding for temporary cover will be done on spoil to be spread or shaped where

spreading or shaping will be delayed 14 days or longer; or disturbed areas where construction activities are not anticipated for 14 days; unless it is determined by the COTR that the cover period will be too short to make seeding practical.

c) No seedbed preparation will be required if the construction equipment has produced a scarified surface and the seeding is done the day the areas to be seeded are worked. If the construction equipment has produced a slick surface or seeding is not done the day areas are worked; a seedbed will be prepared by scarifying the soil surface with a spike-tooth harrow or similar implement to a depth of one inch. Temporary vegetation seeding will be applied at the following rates:

Seeding Period	**Species**	**Minimum % Pure Live Seed**	**Pure Live Seed (1b/ac)**
Mar 1 - Aug 31	Brown Top Millet (hulled)	72	25
Sep 1 - Feb 28	Ryegrass	82	25

d) Fertilizer will be applied according to specifications in Subsidiary Item, Fertilization.

5) Mulching - Erosion Control Revegetation Mat

a) This item consists of furnishing and applying an erosion control revegetation mat (ECRM) on all slopes steeper than 6:1 seeded to permanent vegetation.

b) The ECRM shall conform to the requirements of Material Specification 302, Coconut Fiber Erosion Control Revegetation Mat.

c) The ECRM must provide fiber reinforcement to minimize soil erosion and break up rainfall impact. The material must be open to allow water, air, and sunlight to penetrate and retain sufficient moisture to provide a microclimate for seed germination and plant growth.

d) The ECRM must be stable enough to survive installation and persist in the environment long enough for seed germination and initial establishment of grasses.

e) Final graded slope shall be free of all rocks, clods, vegetation or other obstructions so that the blanket will have direct contact with soil surface.

f) Do not drive tracked or heavy equipment over the ECRM.

g) The ECRM will be anchored as per manufacturer's recommendations with 8 Ga., 8 in. x 2 in. x 8 in. wire staples.

h) ECRM will be placed on areas that have been seeded and fertilized within the same workday as the seeding and fertilization.

i) ECRM will be installed up and down the slope and as per manufacturer's recommendations.

6) Measurement and payment shall be by Method 2. Such payment shall be considered full compensation for all material, labor, equipment, tools and any other items necessary and incidental to the completion of the work. Such payment will constitute full compensation for "Subsidiary Item, Pollution Control”.

Construction Specification 8—Mobilization and Demobilization

1. Scope

The work consists of the mobilization and demobilization of the contractor's forces and equipment necessary for performing the work required under the contract. It does not include mobilization and demobilization for specific items of work for which payment is provided elsewhere in the contract. Mobilization will not be considered as work in fulfilling the contract requirements for commencement of work.

2. Equipment and material

Mobilization shall include all activities and associated costs for transportation of contractor's personnel, equipment, and operating supplies to the site; establishment of offices, buildings, and other necessary general facilities for the contractor's operations at the site; premiums paid for performance and payment bonds including coinsurance and reinsurance agreements as applicable; and other items specified in section 4 of this specification.

Demobilization shall include all activities and costs for transportation of personnel, equipment, and supplies not required or included in the contract from the site; including the disassembly, removal, and site cleanup of offices, buildings, and other facilities assembled on the site specifically for this contract.

This work includes mobilization and demobilization required by the contract at the time of award. If additional mobilization and demobilization activities and costs are required during the performance of the contract as a result of changed, deleted, or added items of work for which the contractor is entitled to an adjustment in contract price, compensation for such costs will be included in the price adjustment for the item or items of work changed or added.

3. Payment

Payment will be made as the work proceeds, after presentation of paid invoices or documentation of direct costs by the contractor showing specific mobilization and demobilization costs and supporting evidence of the charges of suppliers, subcontractors, and others. When the total of such payments is less than the lump sum contract price, the balance remaining will be included in the final contract payment. Payment of the lump sum contract price for mobilization and demobilization will constitute full compensation for completion of the work.

Payment will not be made under this item for the purchase costs of materials having a residual value, the purchase costs of materials to be incorporated in the project, or the purchase costs of operating supplies.

4. Items of work and construction details

(See next page.)

4. Items of work and construction details

Items of work to be performed in conformance with this specification and the construction details therefore are:

a. Bid Item 1, Mobilization and Demobilization

(1) This item shall consist of mobilizing and demobilizing personnel and equipment in preparation to perform the work within the scope of this contract.

(2) This item shall not include transportation of personnel, equipment and operating supplies between and within the work limit areas of this Contract.

(3) Fences, which must be cut or removed for access, shall be repaired or replaced by the Contractor at his/her expense to equal or exceed the quality of fencing that was in place prior to cutting or removal.

(4) Access shall be as shown on the drawings. If alternate routes are obtained by the Contractor, they must be approved by the Contracting Officer prior to use. All access routes shall be restored, by the Contractor, to a condition equal to or better than the condition prior to the commencement of work under this contract.

(5) Payment will be as stated in Section 3, “Payment.” Such payment will constitute full compensation for related Subsidiary Item, Traffic Control.

Construction Specification 9—Traffic Control

1. Scope

The work shall consist of establishing traffic control and maintaining safe, convenient use of public roads and rights-of-way.

2. Traffic and access

The contractor's operations shall cause no unnecessary inconvenience to the public. The public rights-of-way shall be maintained at all times unless interruption is authorized by proper local authority. Contractor's authorized closing or detour plans shall be provided to the engineer for approval.

Safe and adequate access shall be provided and maintained to all public protection devices and to all critical utility control locations. Facility access shall be continuous and unobstructed unless otherwise approved.

3. Storage of equipment and material in public streets

Construction materials and equipment shall not be stored or parked on public streets, roads, or highways. During any material or equipment loading or unloading activities that may temporarily interfere with traffic, an acceptable detour shall be provided for the duration of the activity. Any associated expense for this activity is the responsibility of the contractor.

Excavated material, including suitable material that is intended for adjacent trench backfill or other earth backfill as specified in section 5 of this specification, shall not be stored on public streets, roads, or highways that remain in service for the public. Any waiver of this requirement must be obtained from the proper local authority and approved by the engineer. All excess and unsuitable material shall be removed from the site as soon as possible. Any spillage shall be removed from roadways before they are used by the public.

4. Street closures, detours, and barricades

The contractor shall comply with the requirements of all applicable responsible units of government for closure of any street, road, or highway. The contractor shall provide the required barriers, guards, lights, signs, temporary bridges, and flaggers together with informing the public of any detours and construction hazards by the most suitable means available, such as local newspapers or radio stations. The contractor is also responsible for compliance with additional public safety requirements that may arise during construction. The contractor shall furnish, install, and, upon completion of the work, promptly remove all signs, warning devices, and other materials used in the performance of this work.

Unless otherwise specified, the contractor shall notify, in writing, the fire chief, police chief, county sheriff, state patrol, schools that operate school buses, or any other government official as may be appropriate no less than 7 days before closing, partly closing, or reopening any street, road, or highway.

Unless otherwise specified, the contractor shall furnish to the engineer a written plan showing the proposed method of signing, barricading for traffic control, and safety for street detours and closures.

All temporary detours will be maintained to ensure use of public rights-of-way is provided in a safe manner. This may include dust control, grading, and graveling as required in section 7 of this specification.

5. General and specific references

All signs, signals, barricades, use of flaggers, and other traffic control and public safety devices shall conform to the general requirements set forth in the Manual of Uniform Traffic Control Devices (MUTCD) and the latest edition of *Standard Highway Signs and Standard Alphabets for Highway Signs* and/or OSHA *Construction Industry Standards (29 CFR Part 1926), Subpart G, Signs, Signals, and Barricades* unless otherwise specified in section 7 of this specification.

6. Measurement and payment

For items of work for which specific lump sum prices are established in the contract, payment for the work is made at the contract lump sum price. Progress payments will be made based upon the percentage of estimated total time that traffic control will be required unless otherwise specified in section 7 of this specification. Payment will constitute full compensation for all flaggers, labor, materials, equipment, and all other items necessary and incidental to completion of the work.

Compensation for any item of work described in the contract, but not listed in the bid schedule will be included in the payment for the item of work to which it is made subsidiary. Such items and items to which they are made subsidiary are identified in section 7 of this specification.

7. Items of work and construction details

(See next page.)

8. Items of work and construction details

Items of work to be performed in conformance with this specification and the construction details are:

a. Subsidiary Item, Removal of Water

(1) The work shall consist of the removal of surface water and ground water as needed to perform the required construction in accordance with the specifications. It shall include, but not limited to, (1) building and maintaining all necessary temporary impounding works, channels, and diversions, (2) furnishing, installing and operating all necessary pumps, piping and other facilities and equipment, and (3) removing all such temporary works and equipment after they have served their purposes.

(2) No dewatering plan will be required.

(3) No separate payment will be made for this item. Compensation for Subsidiary Item, "Removal of Water" will be included in the payment for Bid Item 5, Rockfill

Construction Specification 21—Excavation

1. Scope

The work shall consist of the excavation required by the drawings and specifications and disposal of the excavated materials.

2. Classification

Excavation is classified as ***common excavation, rock excavation,*** or ***unclassified excavation*** in accordance with the following definitions.

Common excavation is defined as the excavation of all materials that can be excavated, transported, and unloaded using heavy ripping equipment and wheel tractor-scrapers with pusher tractors or that can be excavated and dumped into place or loaded onto hauling equipment by excavators having a rated capacity of one cubic yard or larger and equipped with attachments (shovel, bucket, backhoe, dragline, or clam shell) appropriate to the material type, character, and nature of the materials.

Rock excavation is defined as the excavation of all hard, compacted, or cemented materials that require blasting or the use of ripping and excavating equipment larger than defined for common excavation. The excavation and removal of isolated boulders or rock fragments larger than 1 cubic yard encountered in materials otherwise conforming to the definition of common excavation shall be classified as rock excavation. The presence of isolated boulders or rock fragments larger than 1 cubic yard is not in itself sufficient cause to change the classification of the surrounding material.

For the purpose of these classifications, the following definitions shall apply:

Heavy ripping equipment is a rear-mounted, heavy duty, single-tooth, ripping attachment mounted on a track type tractor having a power rating of at least 250 flywheel horsepower unless otherwise specified in section 10.

Wheel tractor-scraper is a self-loading (not elevating) and unloading scraper having a struck bowl capacity of at least 12 cubic yards.

Pusher tractor is a track type tractor having a power rating of at least 250 flywheel horsepower equipped with appropriate attachments.

Unclassified excavation is defined as the excavation of all materials encountered, including rock materials, regardless of their nature or the manner in which they are removed.

3. Blasting

The transportation, handling, storage, and use of dynamite and other explosives shall be directed and supervised by a person(s) of proven experience and ability who is authorized and qualified to conduct blasting operations.

Blasting shall be done in a manner as to prevent damage to the work or unnecessary fracturing of the underlying rock materials and shall conform to any special requirements in section 10 of this specification. When specified in section 10, the contractor shall furnish the engineer, in writing, a blasting plan before blasting operations begin.

4. Use of excavated material

***Method 1*—**To the extent they are needed, all suitable material from the specified excavations shall be used in the construction of required permanent earthfill or rockfill. The suitability of material for specific purposes is determined by the engineer. The contractor shall not waste or otherwise dispose of suitable excavated material.

***Method 2*—**Suitable material from the specified excavations may be used in the construction of required earthfill or rockfill. The suitability of material for specific purposes is determined by the engineer.

5. Disposal of waste materials

***Method 1*—**All surplus or unsuitable excavated materials are designated as waste and shall be disposed of at the locations shown on the drawings.

***Method 2*—**All surplus or unsuitable excavated materials are designated as waste and shall be disposed of by the contractor at sites of his own choosing away from the site of the work. The disposal shall be in an environmentally acceptable manner that does not violate local rules and regulations.

6. Excavation limits

Excavations shall comply with OSHA Construction Industry Standards (29CFR Part 1926) Subpart P, Excavations, Trenching, and Shoring. All excavations shall be completed and maintained in a safe and stable condition throughout the total construction phase. Structure and trench excavations shall be completed to the specified elevations and to the length and width required to safely install, adjust, and remove any forms, bracing, or supports necessary for the installation of the work. Excavations outside the lines and limits shown on the drawings or specified herein required to meet safety requirements shall be the responsibility of the contractor in constructing and maintaining a safe and stable excavation.

7. Borrow excavation

When the quantities of suitable material obtained from specified excavations are insufficient to construct the specified earthfills and earth backfills, additional material shall be obtained from the designated borrow areas. The extent and depth of borrow pits within the limits of the designated borrow areas shall be as specified in section 10 or as approved by the engineer.

Borrow pits shall be excavated and finally dressed to blend with the existing topography and sloped to prevent ponding and to provide drainage.

8. Overexcavation

Excavation in rock beyond the specified lines and grades shall be corrected by filling the resulting voids with portland cement concrete made of materials and mix proportions approved by the engineer. Concrete that will be exposed to the atmosphere when construction is completed shall meet the requirements of concrete selected for use under Construction Specification 31, Concrete for Major Structures, or 32, Structure Concrete, as appropriate.

Concrete that will be permanently covered shall contain not less than five bags of cement per cubic yard. The concrete shall be placed and cured as specified by the engineer.

Excavation in earth beyond the specified lines and grades shall be corrected by filling the resulting voids with approved, compacted earthfill. The exception to this is that if the earth is to become the subgrade for riprap, rockfill, sand or gravel bedding, or drainfill, the voids may be filled with material conforming to the specifications for the riprap, rockfill, bedding, or drainfill. Before correcting an overexcavation condition, the contractor shall review the planned corrective action with the engineer and obtain approval of the corrective measures.

9. Measurement and payment

For items of work for which specific unit prices are established in the contract, the volume of each type and class of excavation within the specified pay limits is measured and computed to the nearest cubic yard by the method of average cross-sectional end areas or by methods outlined in section 10 of this specification. Regardless of quantities excavated, the measurement for payment is made to the specified pay limits except that excavation outside the specified lines and grades directed by the engineer to remove unsuitable material is included. Excavation required because unsuitable conditions result from the contractor's improper construction operations, as determined by the engineer, is not included for measurement and payment.

***Method 1*—**The pay limits shall be as designated on the drawings.

***Method 2*—**The pay limits shall be defined as follows:

a. The upper limit shall be the original ground surface as it existed before the start of construction operations except that where excavation is performed within areas designated for previous excavation or earthfill, the upper limit shall be the modified ground surface resulting from the specified previous excavation or earthfill.
b. The lower and lateral limits shall be the neat lines and grades shown on the drawings.

***Method 3* —**The pay limits shall be defined as follows:

a. The upper limit shall be the original ground surface as it existed before the start of construction operations except that where excavation is performed within areas designated for previous excavation or earthfill, the upper limit shall be the modified ground surface resulting from the specified previous excavation or earthfill.
b. The lower and lateral limits shall be the true surface of the completed excavation as directed by the engineer.

***Method 4*—**The pay limits shall be defined as follows:

a. The upper limit shall be the original ground surface as it existed before the start of construction operations except that where excavation is performed within areas designated for previous excavation or earthfill, the upper limit shall be the modified ground surface resulting from the specified previous excavation or earthfill.
b. The lower limit shall be at the bottom surface of the proposed structure.
c. The lateral limits shall be 18 inches outside of the outside surface of the proposed structure or shall be vertical planes 18 inches outside of and parallel to the footings, whichever gives the larger pay quantity, except as provided in d below.
d. For trapezoidal channel linings or similar structures that are to be supported upon the sides of the excavation without intervening forms, the lateral limits shall be at the underside of the proposed lining or structure.
e. For the purposes of the definitions in b, c, and d, above, any specified bedding or drainfill directly beneath or beside the structure will be considered to be a part of the structure.

***All methods*—**The following provisions apply to all methods of measurement and payment.

Payment for each type and class of excavation is made at the contract unit price for that type and class of excavation. Such payment will constitute full compensation for all labor, materials, equipment, and all other items necessary and incidental to the performance of the work except that extra payment for backfilling overexcavation will be made in accordance with the following provisions.

Payment for backfilling overexcavation, as specified in section 8 of this specification, is made only if the excavation outside specified lines and grades is directed by the engineer to remove unsuitable material and if the unsuitable condition is not a result of the contractor's improper construction operations as determined by the engineer.

Compensation for any item of work described in the contract, but not listed in the bid schedule is included in the payment for the item of work to which it is made subsidiary. Such items and the items to which they are made subsidiary are identified in section 10 of this specification.

10. Items of work and construction details

10. Items of work and construction details

Items of work to be performed in conformance with this specification and the construction details are:

a. Bid Item 3, Excavation

(1) This item shall consist of all excavation required to perform the work as shown in the plans, as called for in the specifications and as staked in the field. Excavation shall be classified as *Common Excavation.*

(2) If the contractor elects to perform any of the excavation in the wet (under normal water level conditions) he will assure that the final excavated surface shall be uniform and free from any abrupt changes in grade. The lines and grades shown on the drawings or staked in the field shall be adhered to.

(3) All unconsolidated and undesirable loose material, as determined by the COTR, shall be removed from the damaged slope area. The final surface of the excavated area shall be undisturbed soil and have a slope no steeper than one horizontal to one vertical (1:1) or as shown on the drawings.

(4) Use of excavated material shall be by Method 2 with the following addition; "Only the excavated material that meets the requirements of Specification 23, "Earthfill" and only the amount necessary to complete the earthfill, requirements shall be stockpiled on the construction site for later use".

(5) Disposal of waste material shall be by Method 1 with the following addition; "All excess or undesirable excavated material shall be loaded and hauled to the "Soil Disposal Site" shown on the drawings. If approved by the COTR excavated soil may be used at the construction site to fill holes along the channel berm within the work limits. Any soil used in this manner will be blade dressed and left in a smooth and neat condition".

(6) The completed excavation shall not remain exposed for a period of time exceeding 24 hours prior to the start of the placement of the geotextile, drainfill, rockfill, rock riprap and/or earthfill.

(7) Section 9, "Measurement and Payment", of this specification is deleted in its entirety and is replaced as follows:

Payment shall be made at the lump sum price in the contract and such payment shall be considered as full compensation for all labor, materials, equipment, and all other items necessary and incidental to the performance of the work except that extra payment for backfilling overexcavation will be made in accordance with the following provisions:

Payment for backfilling overexcavation is made only if the excavation outside specified lines and grades is directed by the COTR to remove unsuitable material and if the unsuitable condition is not a result of the contractor's improper construction operations as determined by the COTR.

Construction Specification 23—Earthfill

1. Scope

The work consists of the construction of earth embankments, other earthfills, and earth backfills required by the drawings and specifications.

Earthfill is composed of natural earth materials that can be placed and compacted by construction equipment operated in a conventional manner.

Earth backfill is composed of natural earth material placed and compacted in confined spaces or adjacent to structures (including pipes) by hand tamping, manually directed power tampers or vibrating plates, or their equivalent.

2. Material

All fill material shall be obtained from required excavations and designated borrow areas. The selection, blending, routing, and disposition of material in the various fills shall be subject to approval by the engineer.

Fill materials shall contain no frozen soil, sod, brush, roots, or other perishable material. Rock particles larger than the maximum size specified for each type of fill shall be removed prior to compaction of the fill.

The types of material used in the various fills shall be as listed and described in the specifications and drawings.

3. Foundation preparation

Foundations for earthfill shall be stripped to remove vegetation and other unsuitable material or shall be excavated as specified.

Except as otherwise specified, earth foundation surfaces shall be graded to remove surface irregularities and shall be scarified parallel to the axis of the fill or otherwise acceptably scored and loosened to a minimum depth of 2 inches. The moisture content of the loosened material shall be controlled as specified for the earthfill, and the surface material of the foundation shall be compacted and bonded with the first layer of earthfill as specified for subsequent layers of earthfill.

Earth abutment surfaces shall be free of loose, uncompacted earth in excess of 2 inches in depth normal to the slope and shall be at such a moisture content that the earthfill can be compacted against them to produce a good bond between the fill and the abutments.

Rock foundation and abutment surfaces shall be cleared of all loose material by hand or other effective means and shall be free of standing water when fill is placed upon them. Occasional rock outcrops in earth foundations for earthfill, except in dams and other structures designed to restrain the movement of water, shall not require special treatment if they do not interfere with compaction of the foundation and initial layers of the fill or the bond between the foundation and the fill.

Foundation and abutment surfaces shall be no steeper than one horizontal to one vertical unless otherwise specified. Test pits or other cavities shall be filled with compacted earthfill conforming to the specifications for the earthfill to be placed upon the foundation.

4. Placement

Earthfill shall not be placed until the required excavation and foundation preparation have been completed and the foundation has been inspected and approved by the engineer. Earthfill shall not be placed upon a frozen surface nor shall snow, ice, or frozen material be incorporated in the earthfill matrix.

Earthfill shall be placed in approximately horizontal layers. The thickness of each layer before compaction shall not exceed the maximum thickness specified in section 10 or shown on the drawings. Materials placed by dumping in piles or windrows shall be spread uniformly to not more than the specified thickness before being compacted.

Hand compacted earth backfill shall be placed in layers whose thickness before compaction does not exceed the maximum thickness specified for layers of earth backfill compacted by manually directed power tampers.

Earth backfill shall be placed in a manner that prevents damage to the structures and allows the structures to assume the loads from the earth backfill gradually and uniformly. The height of the earth backfill adjacent to a structure shall be increased at approximately the same rate on all sides of the structure.

Earthfill and earth backfill in dams, levees, and other structures designed to restrain the movement of water shall be placed to meet the following additional requirements:

(a) The distribution of materials throughout each zone shall be essentially uniform, and the earthfill shall be free from lenses, pockets, streaks, or layers of material differing substantially in texture, moisture content, or gradation from the surrounding material. Zone earthfills shall be constructed concurrently unless otherwise specified.

(b) If the surface of any layer becomes too hard and smooth for proper bond with the succeeding layer, it shall be scarified parallel to the axis of the fill to a depth of not less than 2 inches before the next layer is placed.

(c) The top surface of embankments shall be maintained approximately level during construction with two exceptions: A crown or cross-slope of about 2 percent shall be maintained to ensure effective drainage, or as otherwise specified for drainfill or sectional zones.

(d) Dam embankments shall be constructed in continuous layers from abutment to abutment except where openings to facilitate construction or to allow the passage of streamflow during construction are specifically authorized in the contract.

(e) Embankments built at different levels as described under (c) or (d) above shall be constructed so that the slope of the bonding surfaces between embankment in place and embankment to be placed is not steeper than 3 feet horizontal to 1 foot vertical. The bonding surface of the embankment in place shall be stripped of all material not meeting the requirements of this specification and shall be scarified, moistened, and recompacted when the new earthfill is placed against it. This ensures a good bond with the new earthfill and obtains the specified moisture content and density at the contact of the inplace and new earthfills.

5. Control of moisture content

During placement and compaction of earthfill and earth backfill, the moisture content of the material being placed shall be maintained within the specified range.

The application of water to the earthfill material shall be accomplished at the borrow areas insofar as practicable. Water may be applied by sprinkling the material after placement on the earthfill, if necessary. Uniform moisture distribution shall be obtained by disking.

Material that is too wet when deposited on the earthfill shall either be removed or be dried to the specified moisture content prior to compaction.

If the top surface of the preceding layer of compacted earthfill or a foundation or abutment surface in the zone of contact with the earthfill becomes too dry to permit suitable bond, it shall either be removed or scarified and moistened by sprinkling to an acceptable moisture content before placement of the next layer of earthfill.

6. Compaction

Earthfill—Earthfill shall be compacted according to the following requirements for the class of compaction specified:

> ***Class A compaction*—**Each layer of earthfill shall be compacted as necessary to provide the density of the earthfill matrix not less than the minimum density specified in Section 10 or identified on the drawings. The earthfill matrix is defined as the portion of the earthfill material finer than the maximum particle size used in the compaction test method specified.
>
> ***Class B compaction*—**Each layer of earthfill shall be compacted to a mass density not less than the minimum density specified.
>
> ***Class C compaction*—**Each layer of earthfill shall be compacted by the specified number of passes of the type and weight of roller or other equipment specified or by an approved equivalent method. Each pass shall consist of at least one passage of the roller wheel or drum over the entire surface of the layer.

Earth backfill—Earth backfill adjacent to structures shall be compacted to a density equivalent to that of the surrounding inplace earth material or adjacent required earthfill or earth backfill. Compaction shall be accomplished by hand tamping or manually directed power tampers, plate vibrators, walk-behind, miniature, or self-propelled rollers. Unless otherwise specified heavy equipment including backhoe mounted power tampers or vibrating compactors and manually directed vibrating rollers shall not be operated within 2 feet of any structure. Towed or self-propelled vibrating rollers shall not be operated within 5 feet of any structure. Compaction by means of drop weights operating from a crane or hoist is not permitted.

The passage of heavy equipment will not be allowed:

- Over cast-in-place conduits within 14-days after placement of the concrete
- Over cradled or bedded precast conduits within 7 days after placement of the concrete cradle or bedding
- Over any type of conduit until the backfill has been placed above the top surface of the structure to a height equal to one-half the clear span width of the structure or pipe or 2 feet, whichever is greater, except as may be specified in section 10.

Compacting of earth backfill adjacent to structures shall not be started until the concrete has attained the strength specified in section 10 for this purpose. The strength is determined by compression testing of test cylinders cast by the contractor's quality control personnel for this purpose and cured at the work site in the manner specified in ASTM C 31 for determining when a structure may be put into service.

When the required strength of the concrete is not specified as described above, compaction of earth backfill adjacent to structures shall not be started until the following time intervals have elapsed after placement of the concrete.

Structure	Time interval (days)
Vertical or near-vertical walls with earth loading on one side only	14
Walls backfilled on both sides simultaneously	7
Conduits and spillway risers, cast-in-place (with inside forms in place)	7
Conduits and spillway risers, cast-in-place (inside forms removed)	14
Conduits, pre-cast, cradled	2
Conduits, pre-cast, bedded	1
Cantilever outlet bents (backfilled both sides simultaneously)	3

7. Reworking or removal and replacement of defective earthfill

Earthfill placed at densities lower than the specified minimum density or at moisture contents outside the specified acceptable range of moisture content or otherwise not conforming to the requirements of the specifications shall be reworked to meet the requirements or removed and replaced by acceptable earthfill. The replacement earthfill and the foundation, abutment, and earthfill surfaces upon which it is placed shall conform to all requirements of this specification for foundation preparation, approval, placement, moisture control, and compaction.

8. Testing

During the course of the work, the engineer will perform quality assurance tests required to identify material; determine compaction characteristics; determine moisture content; and determine density of earthfill in place. Tests performed by the engineer will be used to verify that the earthfills conform to contract requirements of the specifications and not as a replacement for the contractor's quality control program.

Densities of earthfill requiring Class A compaction will be determined in accordance with ASTM D 1556, D 2167, D 2922, or D 2937 except that the volume and moist weight of included rock particles larger than those used in the compaction test method specified for the type of fill will be determined and deducted from the volume and moist weight of the total sample before computation of density or, if using the nuclear gauge, added to the specified density to bring it to the measure of equivalent composition for comparison (see ASTM D 4718). The density so computed is used to determine the percent compaction of the earthfill matrix. Unless otherwise specified, moisture content is determined by one of the following methods: ASTM D 2216, D 3017, D 4643, D 4944, or D 4959.

9. Measurement and payment

For items of work for which specific unit prices are established in the contract, the volume of each type and compaction class of earthfill and earth backfill within the specified zone boundaries and pay limits is measured and computed to the nearest cubic yard by the method of average cross-sectional end areas. Unless otherwise specified in section 10, no deduction in volume is made for embedded items, such as, but not limited to, conduits, inlet structures, outlet structures, embankment drains, sand diaphragm and outlet, and their appurtenances.

The pay limits shall be as defined below, with the further provision that earthfill required to fill voids resulting from overexcavation of the foundation, outside the specified lines and grades, will be included in the measurement for payment only under the following conditions:

- Where such overexcavation is directed by the engineer to remove unsuitable material, and
- Where the unsuitable condition is not a result of the contractor's improper construction operations as determined by the engineer.

Earthfill beyond the specified lines and grades to backfill excavation required for compliance with OSHA requirements will be considered subsidiary to the earthfill bid item(s).

Method 1—The pay limits shall be as designated on the drawings.

Method 2—The pay limits shall be the measured surface of the foundation when approved for placement of the earthfill and the specified neat lines of the earthfill surface.

Method 3—The pay limits shall be the measured surface of the foundation when approved for placement of the earthfill and the measured surface of the completed earthfill.

Method 4—The pay limits shall be the specified pay limits for excavation and the specified neat lines of the earthfill surface.

Method 5—The pay limits shall be the specified pay limits for excavation and the measured surface of the completed earthfill.

Method 6—Payment for each type and compaction class of earthfill and earth backfill is made at the contract unit price for that type and compaction class of earthfill. Such payment will constitute full compensation for all labor, material, equipment, and all other items necessary and incidental to the performance of the work.

Method 7—Payment for each type and compaction class of earthfill and earth backfill is made at the contract unit price for that type and compaction class of earthfill. Such payment will constitute full compensation for all labor, material, equipment, and all other items necessary and incidental to the performance of the work except furnishing, transporting, and applying water to the foundation and earthfill material. Water applied to the foundation and earthfill material is measured and payment made as specified in Construction Specification 10.

All methods—The following provisions apply to all methods of measurement and payment. Compensation for any item of work described in the contract, but not listed in the bid schedule is included in the payment for the item of work to which it is made subsidiary. Such items and the items to which they are made subsidiary are identified in section 10 of this specification.

10. Items of work and construction details

10. Items of work and construction details

Items of work to be performed in conformance with this specification and the construction details therefore are:

a. Bid Item 4, Earthfill, Topsoil

(1) This item shall consist of all work necessary to furnish, haul, place and shape the necessary earthfill, topsoil needed to complete the channel slope repair as shown on the drawings and specified herein.

(2) When on-site earthfill, topsoil is not sufficient to complete the work, or when existing earthfill, topsoil is deemed unsuitable by the COTR, the contractor shall provide earthfill, topsoil from off-site borrow areas. Earthfill, topsoil, delivered to the site, shall be friable **surface** soil reasonably free of grass, roots, weeds, sticks, stones or other foreign material. It shall be classified as SC or CL on the Unified Soil Classification System. **All earthfill, topsoil shall be approved by the COTR before placement**. All rejected earthfill, topsoil will be removed from the construction site at the contractor's expense.

(3) Compaction shall be Class C in accordance with Section 6 of this specification with the following additions; "Once the surface of the rock riprap, rockfill, or graded soil surface, has been approved by the COTR, the earthfill, topsoil will be spread in uniform layers, not to exceed six (6) inches, and lightly bucket compacted, to ensure a homogeneous mass, to the lines and grade shown on the drawings. Care will be taken in the placement of the earthfill, topsoil so as not to displace the rockfill or aggregate material. The finished surface of the earthfill, topsoil shall have a smooth surface free of clods".

(4) The moisture content of the earthfill, topsoil shall be homogeneous and shall be maintained at a level which will:

a. Prevent bulking or dilatant behavior of the material under the action of the hauling or placing equipment. Dilatant behavior is exhibited when a soil sample is shaken and the surface shines due to the movement of free water.

b. Prevent adherence of the material to the hauling or placing equipment.

c. Ensure the crushing and blending of the soil clods into a homogenous mass.

d. Allow a sample to be hand molded and will form a ball that does not readily separate and does not ooze through the fingers.

(5) Section 9, "Measurement and Payment", of this specification is deleted in its entirety and is replaced as follows:

Payment shall be made at the lump sum price in the contract and such payment shall be considered as full compensation for all material, labor, equipment, tools and other items necessary and incidental to the completion of the work as described in this contract.

Construction Specification 25—Rockfill

1. Scope
The work consists of the construction of rockfill zones of embankments and other rockfills required by the drawings and specifications, including bedding where specified.

2. Material
Material for rockfill and bedding shall be obtained from the specified sources unless otherwise specified in section 10 of this specification. The material shall be excavated, selected, processed, and handled as necessary to conform to the specified gradation requirements.

3. Foundation preparation
Foundations for rockfill shall be stripped to remove vegetation and other unsuitable material or shall be excavated as specified.

Except as otherwise specified, earth foundation surfaces shall be graded to remove surface irregularities, and test pits or other cavities shall be filled with compacted earthfill of approximately the same kind and density as the adjacent foundation material.

Rock foundation surfaces shall be cleared of all loose material not conforming to the specifications for the rockfill.

Abutments for rockfill zones of embankments shall be prepared as specified above for foundations.

Rockfill and/or bedding shall not be placed until the foundation preparation is completed and the foundation and excavations have been inspected and approved.

4. Bedding
When a bedding layer beneath rockfill is specified, the bedding material shall be spread uniformly on the prepared subgrade surfaces to the depth indicated. Compaction of the bedding material shall be as specified in section 10 of this specification.

5. Placement
***Method 1*—**The rock shall be dumped and spread into position in approximately horizontal layers not to exceed 3 feet in thickness. It shall be placed to produce a reasonably homogeneous stable fill that contains no segregated pockets of large or small fragments or large unfilled spaces caused by bridging of the larger rock fragments.

***Method 2*—**The rock shall be dumped and spread into position in approximately horizontal layers not to exceed 3 feet in thickness. The rock shall be placed so that the completed fill shall be graded with the smaller rock fragments placed in the inner portion of the embankment and the larger rock fragments placed on the outer slopes. Rock shall be placed to produce a stable fill that contains no large unfilled spaces caused by bridging of the larger fraction.

6. Control of moisture
The moisture content of rockfill material shall be controlled as specified in section 10 of this specification. When the addition of water is required, it shall be applied in a manner to avoid excessive wetting of adjacent earthfill. Except as specified in section 10 of this specification, control of the moisture content is not required.

The moisture content of the bedding material shall be controlled to ensure that bulking of the sand materials does not occur during compaction operations.

7. Compaction of rockfill

Rockfill shall be compacted as described below for the class of compaction specified or by an approved equivalent method.

***Class I compaction*—**Each layer of fill shall be compacted by at least four passes over the entire surface with a steel-drum vibrating roller that weighs at least 5 tons and exerting a vertical vibrating force of not less than 20,000 pounds at a frequency not less than 1,200 times per minute.

***Class II compaction*—**Each layer of fill shall be compacted by at least four passes over the entire surface by a track of a crawler-type tractor weighing at least 20 tons.

***Class III compaction*—**No compaction is required beyond that resulting from the placing and spreading operations.

Heavy equipment shall not be operated within 2 feet of any structure. Vibrating rollers shall not be operated within 5 feet of any structure. Compaction by means of drop weights operating from a crane, hoist, or similar equipment is not permitted.

When compaction other than Class III compaction is specified, rockfill placed in trenches or other locations inaccessible to heavy equipment shall be compacted by manually controlled pneumatic or vibrating tampers or by equivalent methods approved by the engineer.

8. Compaction of bedding

Bedding shall be compacted according to the following requirements for the Class of compaction specified:

***Class A compaction*—**Each layer of bedding shall be compacted to a relative density of not less than 70 percent as determined by ASTM Method D 4254.

***Class I compaction*—**Each layer of bedding shall be compacted by at least two passes over the entire surface with a steel-drum vibrating roller weighing at least 5 tons and exerting a vertical vibrating force not less than 20,000 pounds at a frequency not less than 1,200 times per minute, or an approved equivalent method.

***Class II compaction*—**Each layer of bedding shall be compacted by one of the following methods or by an equivalent method approved by the engineer:

a. At least two passes over the entire surface with pneumatic rubber-tired roller exerting a minimum pressure of 75 pounds per square inch. A pass is defined as at least one passage of the roller wheel, track, tire, or drum over the entire surface of the bedding layer.
b. At least four passes over the entire surface with the track of a crawler-type tractor weighing a minimum of 20 tons.
c. Controlled movement of the hauling equipment so that the entire surface is traversed by a minimum of one tread track of the loaded equipment.

***Class III compaction*—**No compaction is required beyond that resulting from the placing and spreading operations.

Heavy equipment shall not be operated within 2 feet of any structure. Vibrating rollers shall not be operated within 5 feet of any structure. Compaction by means of drop weights operating from a crane, hoist, or similar equipment is not permitted.

When compaction other than Class III is specified, bedding placed in trenches or other locations inaccessible to heavy equipment shall be compacted by manually controlled pneumatic or vibrating tampers or by equivalent methods approved by the engineer.

9. Measurement and payment

For items of work for which specific unit prices are established in the contract, the volume of each type of rockfill, including bedding, with the zone boundaries and limits specified on the drawings or established by the engineer is measured and computed to the nearest cubic yard by the method of average cross-sectional end areas.

Payment for each type of rockfill is made at the contract unit price for that type of fill. Except as otherwise specified in section 10 of this specification, such payment will constitute full compensation for all labor, equipment, material, and all other items necessary and incidental to the performance of the work including furnishing, placing, and compacting the bedding material.

Compensation for any type of work described in the contract, but not listed in the bid schedule is included in the payment for the item of work to which it is made subsidiary. Such items and the items to which they are made subsidiary are identified in section 10 of this specification.

10. Items of work and construction details

10. Items of work and construction details

Items of work to be performed in conformance with this specification and the construction details therefore are:

a. Bid Item 5, Rockfill.

(1) This item shall consist of furnishing and placing the rockfill at the locations and to the lines and grades shown on the construction drawings and/or as staked in the field by the COTR.

(2) The rockfill shall be crushed limestone meeting the requirements of coarse aggregate, Size #57 and/or Size #1 as indicated on the drawings, in accordance with ASTM C 33. Placement shall be as shown in the drawings.

(3) No rockfill shall be placed until the COTR has inspected and approved the foundation.

(4) Placement shall be by Method 1 as described in Section 5 of this specification.

(5) Compaction shall be Class III as described in Section 7 of this specification.

(6) Section 9, “Measurement and Payment”, of this specification is deleted in its entirety and is replaced as follows:

Payment shall be made at the lump sum price in the contract and such payment shall be considered as full compensation for all material, labor, equipment, tools and other items necessary and incidental to the completion of the work as described in this contract.

Such payment will constitute full compensation for related Subsidiary Item, Removal of Water.

Construction Specification 61—Rock Riprap

1. Scope

The work shall consist of the construction of rock riprap revetments and blankets, including filter or bedding where specified.

2. Material

Rock riprap shall conform to the requirements of Material Specification 523, Rock for Riprap, or if so specified, shall be obtained from designated sources. It shall be free from dirt, clay, sand, rock fines, and other material not meeting the required gradation limits.

At least 30 days before rock is delivered from other than designated sources, the contractor shall designate in writing the source from which rock material will be obtained and provide information satisfactory to the contracting officer that the material meets contract requirements. The contractor shall provide the contracting officer's technical representative (COTR) free access to the source for the purpose of obtaining samples for testing. The size and grading of the rock shall be as specified in section 8.

Rock from approved sources shall be excavated, selected, and processed to meet the specified quality and grading requirements at the time the rock is installed.

Based on a specific gravity of 2.65 (typical of limestone and dolomite) and assuming the individual rock is shaped midway between a sphere and a cube, typical size/weight relationships are:

Sieve size of rock	Approx. weight of rock	Weight of test pile
16 inches	300 pounds	6,000 pounds
11 inches	100 pounds	2,000 pounds
6 inches	15 pounds	300 pounds

The results of the test shall be compared to the gradation required for the project. Test pile results that do not meet the construction specifications shall be cause for the rock to be rejected. The test pile that meets contract requirements shall be left on the job site as a sample for visual comparison. The test pile shall be used as part of the last rock riprap to be placed.

Filter or bedding aggregates when required shall conform to Material Specification 521, Aggregates for Drainfill and Filters, unless otherwise specified. Geotextiles shall conform to Material Specification 592, Geotextile.

3. Subgrade preparation

The subgrade surface on which the rock riprap, filter, bedding, or geotextile is to be placed shall be cut or filled and graded to the lines and grades shown on the drawings. When fill to subgrade lines is required, it shall consist of approved material and shall conform to the requirements of the specified class of earthfill.

Rock riprap, filter, bedding, or geotextile shall not be placed until the foundation preparation is completed and the subgrade surface has been inspected and approved.

4. Equipment-placed rock riprap

The rock riprap shall be placed by equipment on the surface and to the depth specified. It shall be installed to the full course thickness in one operation and in such a manner as to avoid serious displacement of the underlying material. The rock for riprap shall be delivered and placed in a manner that ensures the riprap in place is reasonably homogeneous with the larger rocks uniformly distributed and firmly in contact one to another with the smaller rocks and spalls filling the voids between the larger rocks. Some hand placing may be required to provide a neat and uniform surface.

Rock riprap shall be placed in a manner to prevent damage to structures. Hand placing is required as necessary to prevent damage to any new and existing structures.

5. Hand placed rock riprap

The rock riprap shall be placed by hand on the surface and to the depth specified. It shall be securely bedded with the larger rocks firmly in contact one to another without bridging. Spaces between the larger rocks shall be filled with smaller rocks and spalls. Smaller rocks shall not be grouped as a substitute for larger rock. Flat slab rock shall be laid on its vertical edge except where it is laid like paving stone and the thickness of the rock equals the specified depth of the riprap course.

6. Filter or bedding

When the contract specifies filter, bedding, or geotextile beneath the rock riprap, the designated material shall be placed on the prepared subgrade surface as specified. Compaction of filter or bedding aggregate is not required, but the surface of such material shall be finished reasonably smooth and free of mounds, dips, or windrows.

7. Measurement and payment

***Method 1*—**For items of work for which specific unit prices are established in the contract, the quantity of each type of rock riprap placed within the specified limits is computed to the nearest ton by actual weight. The volume of each type of filter or bedding aggregate is measured within the specified limits and computed to the nearest cubic yard by the method of average cross-sectional end areas. For each load of rock riprap placed as specified, the contractor shall furnish to the COTR a statement-of-delivery ticket showing the weight to the nearest 0.1 ton.

Payment is made at the contract unit price for each type of rock riprap, filter, or bedding. Such payment is considered full compensation for completion of the work.

***Method 2*—**For items of work for which specific unit prices are established in the contract, the quantity of each type of rock riprap placed within the specified limits is computed to the nearest 0.1 ton by actual weight. The quantity of each type of filter or bedding aggregate delivered and placed within the specified limits is computed to the nearest 0.1 ton. For each load of rock riprap placed as specified, the contractor shall furnish to the engineer a statement-of-delivery ticket showing the weight to the nearest 0.1 ton. For each load of filter or bedding aggregate, the contractor shall furnish to the COTR a statement-of-delivery ticket showing the weight to the nearest 0.1 ton.

Payment is made at the contract unit price for each type of rock riprap, filter, or bedding. Such payment is considered full compensation for completion of the work.

***Method 3*—**For items of work for which specific unit prices are established by the contract, the volume of each type of rock riprap and filter or bedding aggregate is measured within the specified limits and computed to the nearest cubic yard by the method of average cross-sectional end areas.

Payment is made at the contract unit price for each type of rock riprap, filter, or bedding. Such payment is considered full compensation for completion of the work.

***Method 4*—**For items of work for which specific unit prices are established by the contract, the volume of each type of rock riprap, including filter and bedding aggregate, is measured within the specified limits and computed to the nearest cubic yard by the method of average cross-sectional end areas.

Payment is made at the contract unit price for each type of rock riprap, including filter and bedding. Such payment is considered full compensation for completion of the work.

***Method 5*—**For items of work for which specific unit prices are established by the contract, the quantity of each type of rock riprap placed within the specified limits is computed to the nearest ton by actual weight. For each load of rock for riprap placed as specified, the contractor shall furnish to the COTR a statement-of-delivery ticket showing the weight to the nearest 0.1 ton.

Payment is made at the contract unit price for each type of rock riprap, including geotextile used for filter or bedding. Such payment is considered full compensation for completion of the work.

***Method 6*—**For items of work for which specific unit prices are established by the contract, the volume of each type of rock riprap is measured within the specified limits and computed to the nearest cubic yard by the method of average cross-sectional end areas.

Payment is made at the contract unit price for each type of rock riprap, including geotextile used for filter or bedding. Such payment is considered full compensation for completion of the work.

***All methods*—**The following provision applies to all methods of measurement and payment. Compensation for any item of work described in the contract, but not listed in the bid schedule, is included in the payment for the item of work to which it is made subsidiary. Such items and the items to which they are made subsidiary are identified in section 8.

No separate payment is made for testing the gradation of the test pile. Compensation for testing is included in the appropriate bid item for riprap.

8. Items of work and construction details

8. Items of work and construction details

Items of work to be performed in conformance with this specification and the construction details therefore are:

a. Bid Item 9, Rock Riprap

(1) This item shall consist of furnishing and installing rock riprap to repair the damaged channel slope at the locations specified in the construction drawings and to the lines and grades as shown on the construction drawings and/or as staked in the field. The rock riprap shall be placed in the bottom section of the excavation between stations 1+03 and 1+23 as shown on the plans.

(2) The finish surface of the rock riprap shall be blended into the existing slope at each end of the repair section.

(3) **Riprap shall not be placed until the foundation preparation is completed and the subgrade surfaces have been inspected and approved by the COTR.**

(4) Maximum vertical drop height for rock placed by any method shall not exceed one (1.0) foot.

(5) The riprap shall be Type I and the gradation of the riprap shall be as shown below:

LADOTD 30 LB ROCK RIPRAP GRADATION	
Stone Size (lb)	% Stone Smaller Than
140	100
60	42 – 100
30	15 – 50
10	0 - 15

(6) Any preparatory work required to prepare for placement of the rock shall be considered as included in this item.

(7) Section 7, "Measurement and Payment" of this specification is deleted in its entirety and replaced as follows:

Payment will be made at the specified lump sum unit price as established in the contract. Such payment shall be considered full compensation for all material, labor, equipment, tools and other items necessary and incidental to the completion of the work.

Construction Specification 95—Geotextile

1. Scope
This work consists of furnishing all material, equipment, and labor necessary for the installation of geotextiles.

2. Quality
Geotextiles shall conform to the requirements of Material Specification 592 and this specification.

3. Storage
Before use, the geotextile shall be stored in a clean, dry location out of direct sunlight, not subject to extremes of either hot or cold temperatures, and with the manufacturer's protective cover undisturbed. Receiving, storage, and handling at the job site shall be in accordance with the requirements listed in ASTM D 4873.

4. Surface preparation
The surface on which the geotextile is to be placed shall be graded to the neat lines and grades as shown on the drawings. It shall be reasonably smooth and free of loose rock and clods, holes, depressions, projections, muddy conditions, and standing or flowing water (unless otherwise specified in section 7 of this specification).

5. Placement
Before the geotextile is placed, the soil surface will be reviewed for quality assurance of the design and construction. The geotextile shall be placed on the approved prepared surface at the locations and in accordance with the details shown on the drawings and specified in section 7 of this specification. It shall be unrolled along the placement area and loosely laid, without stretching, in such a manner that it conforms to the surface irregularities when material or gabions are placed on or against it. The geotextile may be folded and overlapped to permit proper placement in designated area(s).

***Method 1*—**The geotextile shall be joined by machine sewing using thread material meeting the chemical requirements for the geotextile fibers or yarn. The sewn overlap shall be 6 inches, and the sewing shall consist of two parallel stitched rows at a spacing of about 1 inch and shall not cross (except for any required re-stitching). The stitching shall be a lock-type stitch. Each row of stitching shall be located a minimum of 2 inches from the geotextile edge. The seam type and sewing machine to be used shall produce a seam strength, in the specified geotextile, that provides a minimum of 90 percent of the tensile strength in the weakest principal direction of the geotextile being used, when tested in accordance with ASTM D 4884. The seams may be factory or field sewn.

The geotextile shall be temporarily secured during placement of overlying material to prevent slippage, folding, wrinkling, or other displacement of the geotextile. Unless otherwise specified, methods of securing shall not cause punctures, tears, or other openings to be formed in the geotextile.

***Method 2*—**The geotextile shall be joined by overlapping a minimum of 18 inches (unless otherwise specified) and secured against the underlying foundation material. Securing pins, approved and provided by the geotextile manufacturer, shall be placed along the edge of the panel or roll material to adequately hold it in place during installation. Pins shall be steel or fiberglass formed as a **U**, **L**, or **T** shape or contain "ears" to prevent total penetration through the geotextile. Steel washers shall be provided on all but the **U**-shaped pins. The upstream or upslope geotextile shall overlap the abutting downslope geotextile. At vertical laps, securing pins shall be inserted through the bottom layers along a line through approximately the mid-point of the overlap. At horizontal laps and across slope labs, securing shall be inserted

through the bottom layer only. Securing pins shall be placed along a line about 2 inches in from the edge of the placed geotextile at intervals not to exceed 12 feet unless otherwise specified. Additional pins shall be installed as necessary and where appropriate to prevent any undue slippage or movement of the geotextile. The use of securing pins will be held to the minimum necessary. Pins are to remain in place unless otherwise specified.

Should the geotextile be torn or punctured, or the overlaps or sewn joint disturbed, as evidenced by visible geotextile damage, subgrade pumping, intrusion, or grade distortion, the backfill around the damaged or displaced area shall be removed and restored to the original approved condition. The repair shall consist of a patch of the same type of geotextile being used and overlaying the existing geotextile. When the geotextile seams are required to be sewn, the overlay patch shall extend a minimum of 1 foot beyond the edge of any damaged area and joined by sewing as required for the original geotextile except that the sewing shall be a minimum of 6 inches from the edge of the damaged geotextile. Geotextile panels joined by overlap shall have the patch extend a minimum of 2 feet from the edge of any damaged area.

Geotextile shall be placed in accordance with the following applicable specification according to the use indicated in section 7:

Slope protection—The geotextile shall not be placed until it can be anchored and protected with the specified covering within 48 hours or protected from exposure to ultraviolet light. In no case shall material be dropped on uncovered geotextile from a height of more than 3 feet.

Subsurface drains—The geotextile shall not be placed until drainfill or other material can be used to provide cover within the same working day. Drainfill material shall be placed in a manner that prevents damage to the geotextile. In no case shall material be dropped on uncovered geotextile from a height of more than 5 feet.

Road stabilization—The geotextile shall be unrolled in a direction parallel to the roadway centerline in a loose manner permitting conformation to the surface irregularities when the roadway fill material is placed on its surface. In no case shall material be dropped on uncovered geotextile from a height of more than 5 feet. Unless otherwise specified, the minimum overlap of geotextile panels joined without sewing shall be 24 inches. The geotextile may be temporarily secured with pins recommended or provided by the manufacturer, but they shall be removed before the permanent covering material is placed.

6. Measurement and payment

***Method 1*—**For items of work for which specific unit prices are established in the contract, the quantity of geotextile for each type placed within the specified limits is determined to the nearest specified unit by measurements of the covered surfaces only, disregarding that required for anchorage, seams, and overlaps. Payment is made at the contract unit price. Such payment constitutes full compensation for the completion of the work.

***Method 2*—**For items of work for which specific unit prices are established in the contract, the quantity of geotextile for each type placed with the specified limits is determined to the nearest specified unit by computing the area of the actual roll size or partial roll size installed. The computed area will include the amount required for overlap, seams, and anchorage as specified. Payment is made at the contract unit price. Such payment constitutes full compensation for the completion of the work.

***Method 3*—**For items of work for which specific lump sum prices are established in the contract, the quantity of geotextile is not measured for payment. Payment for geotextiles is made at the contract lump sum price and constitutes full compensation for the completion of the work.

***All methods*—**The following provisions apply to all methods of measurement and payment. Compensation for any item of work described in the contract, but not listed in the bid schedule, is included in the payment for the item of work to which it is made subsidiary. Such items and the items to which they are made subsidiary are identified in section 7 of this specification.

7. Items of work and construction details

7. Items of work and construction details

Items of work to be performed in conformance with this specification and the construction details therefor are:

a. Bid Item 6, Geotextile

(1) This item shall consist of furnishing and placing geotextile under the rockfill and/or rock riprap at the location and to the extent shown on the drawings.

(2) The geotextile shall be a non-woven Class I geotextile meeting the requirements of Table 592-2 of Material Specification 592.

(3) The foundation shall be inspected and approved by the COTR prior to placement of the geotextile.

(4) Placement shall be by Method 2 with the following additions: "The pinning interval shall not exceed 6 feet and the securing pins shall be a minimum of 12 inches in length. Overlaps shall be made in the direction of the flow or in a manner to prevent the stream flow from getting under the geotextile. Geotextile placed in the wet (under normal water level conditions) may be secured by the placement of the rockfill and/or rock riprap. ***When the contractor selects to place the geotextile in the wet, he shall provide sufficient geotextile and a method of placement to assure complete coverage of the area specified in paragraph (1)***. Any excess geotextile shall be cut off and disposed of at an approved landfill". The use of the Geotextile shall be for *"Slope protection"*.

(5) Payment shall be by Method 3 as described in Section 6 of this specification.

Material Specification 302—Coconut Fiber Erosion Control Revegetation Mat

1. Scope
The specification covers the type and quality of erosion control revegetation mat.

2. Materials
The Erosion Control and Revegetation Mat (ECRM) shall consist of a consistent thickness with the coconut fiber evenly distributed over the entire area of the mat. The coconut fibers shall be covered on the top and bottom with heavy weight photodegradable polypropylene netting having ultraviolet additives to delay the breakdown. The mat shall be sewn together on 1.5 inch centers with polyester thread.

3. Physical Properties
The Erosion Control and Vegetation Mat shall also conform to the following physical properties.

PROPERTY	MARV (a)
Weight (lbs./sq. yd.)	0.5
Polypropylene Netting Opening Dimensions (in)	5/8 x 5/8

4. Shipping and storage
The ECRM shall be shipped/transported in rolls wrapped with a cover for protection from moisture, dust, dirt, debris, and ultraviolet light. The cover shall be maintained undisturbed to the maximum extend possible before placement.

Each roll of ECRM shall be labeled or tagged to clearly identify the manufacturer, brand, type, and the individual production run.

Material Specification 523—Rock for Riprap

1. Scope

This specification covers the quality of rock to be used in the construction of rock riprap.

2. Quality

Individual rock fragments shall be dense, sound, and free from cracks, seams, and other defects conducive to accelerated weathering. Except as otherwise specified, the rock fragments shall be angular to subrounded. The least dimension of an individual rock fragment shall be not less than one-third the greatest dimension of the fragment. ASTM D 4992 provides guidance on selecting rock from a source.

Except as otherwise provided, the rock shall be tested and shall have the following properties:

Rock type 1

- ***Bulk specific gravity (saturated surface-dry basis)***—Not less than 2.5 when tested in accordance with ASTM C 127 on samples prepared as described for soundness testing.
- ***Absorption***—Not more than 2 percent when tested in accordance with ASTM C 127 on samples prepared as described for soundness testing.
- ***Soundness***—The weight loss in 5 cycles shall not be more than 10 percent when sodium sulfate is used or more than 15 percent when magnesium sulfate is used.

Rock type 2

- ***Bulk specific gravity (saturated surface-dry basis)***—Not less that 2.5 when tested in accordance with ASTM C 127 on samples prepared as described for soundness testing.
- ***Absorption***—Not more than 2 percent when tested in accordance with ASTM C 127 on samples prepared as described for soundness testing.
- ***Soundness***—The weight loss in 5 cycles shall be not more than 20 percent when sodium sulfate is used or more than 25 percent when magnesium sulfate is used.

Rock type 3

- ***Bulk specific gravity (saturated surface-dry basis)***—Not less than 2.3 when tested in accordance with ASTM C 127 on samples prepared as described for soundness testing.
- ***Absorption***—Not more than 4 percent when tested in accordance with ASTM C 127 on samples prepared as described for soundness testing.
- ***Soundness***—The weight loss in 5 cycles shall be not more than 20 percent when sodium sulfate is used or more than 25 percent when magnesium sulfate is used.

3. Methods of soundness testing

Rock cube soundness—The sodium or magnesium sulfate soundness test for all rock types (1, 2, or 3) shall be performed on a test sample of 5,000 ± 300 grams of rock fragments, reasonably uniform in size and cubical in shape, and weighing, after sampling, about 100 grams each. They shall be obtained from rock samples that are representative of the total rock mass, as noted in ASTM D 4992, and that have been sawed into slabs as described in ASTM D 5121. The samples shall further be reduced in size by sawing the slabs into cubical blocks. The thickness of the slabs and the size of the sawed fragments shall be determined by the size of the available test apparatus and as necessary to provide, after sawing, the approximate 100-gram samples. The cubes shall undergo five cycles of soundness testing in accordance with ASTM C 88.

Internal defects may cause some of the cubes to break during the sawing process or during the initial soaking period. Do not test any of the

Material Specification 523 Rock for Riprap (continued)

cubes that break during this preparatory process. Such breakage, including an approximation of the percentage of cubes that break, shall be noted in the test report.

After the sample has been dried following completion of the final test cycle and washed to remove the sodium sulfate or magnesium sulfate, the loss of weight shall be determined by subtracting from the original weight of the sample the final weight of all fragments that have not broken into three or more fragments.

The test report shall show the percentage loss of the weight and the results of the qualitative examination.

Rock slab soundness—When specified, the rock shall also be tested in accordance with ASTM D 5240. Deterioration of more than 25 percent of the number of blocks shall be cause for rejection of rock from this source. Rock shall also meet the requirements for average percent weight loss stated below.

- For projects located north of the Number 20 Freeze-Thaw Severity Index Isoline (fig. 523–1). Unless otherwise specified, the average percent weight loss for Rock Type 1 shall not exceed 20 percent when sodium sulfate is used or 25 percent when magnesium sulfate is used. For Rock Types 2 and 3, the average percent weight loss shall not exceed 25 percent for sodium sulfate soundness or 30 percent for magnesium sulfate soundness.
- For projects located south of the Number 20 Freeze-Thaw Severity Index Isoline, unless otherwise specified, the average percent weight loss for Rock Type 1 shall not exceed 30 percent when sodium sulfate is used or 38 percent when magnesium sulfate is used.

Figure 523–1 Number 20 freeze-thaw severity index isoline (map approximates the map in ASTM D 5312)

For Rock Types 2 and 3, the average percent weight loss shall not exceed 38 percent for sodium sulfate soundness or 45 percent for magnesium sulfate soundness.

4. Field durability inspection

Rock that fails to meet the material requirements stated above (if specified), may be accepted only if similar rock from the same source has been demonstrated to be sound after 5 years or more of service under conditions of weather, wetting and drying, and erosive forces similar to those anticipated for the rock to be installed under this specification.

A rock source may be rejected if the rock from that source deteriorates in 3 to 5 years under similar use and exposure conditions expected for the rock to be installed under this specification, even though it meets the testing requirements stated above.

Deterioration is defined as the loss of more than one-quarter of the original rock volume, or severe cracking that would cause a block to split. Measurements of deterioration are taken from linear or surface area particle counts to determine the percentage of deteriorated blocks. Deterioration of more than 25 percent of the pieces shall be cause for rejection of rock from the source.

5. Grading

The rock shall conform to the specified grading limits after it has been placed within the matrix of the rock riprap. Grading tests shall be performed, as necessary, according to ASTM D 5519, Method A, B, or C, as applicable.

Material Specification 592—Geotextile

1. Scope
This specification covers the quality of geotextiles.

2. General requirements
Fibers (threads and yarns) used in the manufacture of geotextile shall consist of synthetic polymers composed of a minimum of 85 percent by weight polypropylenes, polyesters, polyamides, polyethylene, polyolefins, or polyvinylidene-chlorides. They shall be formed into a stable network of filaments or yarns retaining dimensional stability relative to each other. The geo-textile shall be free of defects and conform to the physical requirements in tables 592–1 and 592–2. The geotextile shall be free of any chemical treatment or coating that significantly reduces its porosity. Fibers shall contain stabilizers and/or inhibitors to enhance resistance to ultraviolet light.

Thread used for factory or field sewing shall be of contrasting color to the fabric and made of high strength polypropylene, polyester, or polyamide thread. Thread shall be as resistant to ultraviolet light as the geotextile being sewn.

3. Classification
Geotextiles shall be classified based on the method used to place the threads or yarns forming the fabric. The geotextiles will be grouped into woven and nonwoven types.

Woven—Fabrics formed by the uniform and regular interweaving of the threads or yarns in two directions. Woven fabrics shall be manufactured from monofilament yarn formed into a uniform pattern with distinct and measurable openings, retaining their position relative to each other. The edges of fabric shall be selvedged or otherwise finished to prevent the outer yarn from unraveling.

Nonwoven—Fabrics formed by a random placement of threads in a mat and bonded by heat-bonding, resin-bonding, or needle punching. Nonwoven fabrics shall be manufactured from individual fibers formed into a random pattern with distinct, but variable small openings, retaining their position relative to each other when bonded by needle punching, heat, or resin bonding. The use of nonwovens other than the needle punched geotextiles is somewhat restricted (see note 3 of table 592–2).

4. Sampling and testing
The geotextile shall meet the specified requirements (table 592–1 or 592–2) for the product style shown on the label. Product properties as listed in the latest edition of the "Specifiers Guide," Geotechnical Fabrics Report, (Industrial Fabrics Association International, 1801 County Road BW, Roseville, MN 55113-4061) and that represent minimum average roll values, are acceptable documentation that the product style meets the requirements of these specifications.

For products that do not appear in the above directory or do not have minimum average roll values listed, typical test data from the identified production run of the geotextile will be required for each of the specified tests (tables 592–1 or 592–2) as covered under clause AGAR 452.236-76.

5. Shipping and storage
The geotextile shall be shipped/transported in rolls wrapped with a cover for protection from moisture, dust, dirt, debris, and ultraviolet light. The cover shall be maintained undisturbed to the maximum extend possible before placement.

Each roll of geotextile shall be labeled or tagged to clearly identify the brand, class, and the individual production run in accordance with ASTM D 4873.

Table 592–1 Requirements for woven geotextiles

Property	Test method	Class I	Class II & III	Class IV
Tensile strength (pounds) 1/	ASTM D 4632 grab test	200 minimum in any principal direction	120 minimum in any principal direction	180 minimum in any principal direction
Elongation at failure (percent) 1/	ASTM D 4632 grab test	<50	<50	<50
Puncture (pounds) 1/	ASTM D 4833	90 minimum	60 minimum	60 minimum
Ultraviolet light (% residual tensile strength)	ASTM D 4355 150-hr exposure	70 minimum	70 minimum	70 minimum
Apparent opening size (AOS)	ASTM D 4751	As specified, but no smaller than 0.212 mm (#70) 2/	As specified, but no smaller than 0.212 mm (#70) 2/	As specified, but no smaller than 0.212 mm (#70) 2/
Percent open area (percent)	CWO-02215-86	4.0 minimum	4.0 minimum	1.0 minimum
Permitivity sec^{-1}	ASTM D 4491	0.10 minimum	0.10 minimum	0.10 minimum

1/ Minimum average roll value (weakest principal direction).
2/ U.S. standard sieve size.
Note: CWO is a USACE reference.

Table 592–2 Requirements for nonwoven geotextiles

Property	Test method	Class I	Class II	Class III	Class IV 3/
Tensile strength (lb) 1/	ASTM D 4632 grab test	180 minimum	120 minimum	90 minimum	115 minimum
Elongation at failure (%) 1/	ASTM D 4632	≥ 50	≥ 50	≥ 50	≥ 50
Puncture (pounds)	ASTM D 4833	80 minimum	60 minimum	40 minimum	40 minimum
Ultraviolet light (% residual tensile strength)	ASTM D 4355 150-hr exposure	70 minimum	70 minimum	70 minimum	70 minimum
Apparent opening size (AOS)	ASTM D 4751	As specified max. #40 2/	As specified max. #40 2/	As specified max. #40 2/	As specified max. #40 2/
Permittivity sec^{-1}	ASTM D 4491	0.70 minimum	0.70 minimum	0.70 minimum	0.10 minimum

1/ Minimum average roll value (weakest principal direction).
2/ U.S. standard sieve size.
3/ Heat-bonded or resin-bonded geotextile may be used for classes III and IV. They are particularly well suited to class IV. Needle-punched geotextiles are required for all other classes.