United States Department of Agriculture
Natural Resources Conservation Service

OMB No. 0578-0030
NRCS-PDM-20

DAMAGE SURVEY REPORT (DSR)
Emergency Watershed Protection Program – Recovery

Section 1A

Date of Report: 11/03/2006

DSR Number: 087-05-51K Project Number: _____

NRCS Entry Only
Eligible: YES ☒ NO ☐
Approved: YES ☒ NO ☐
Funding Priority Number (from Section 4) 2e
Limited Resource Area: YES ☐ NO ☒

Section 1B Sponsor Information

Sponsor Name: St. Bernard Parish Government

Address: 8201 West Judge Perez Drive

City/State/Zip: Chalmette, Louisiana 70043

Telephone Number: (504) 278-4317 Fax: (504) 278-4480

Section 1C Site Location Information

County: St. Bernard State: LA Congressional District: 3

Latitude: see below Longitude: see below Section: 59, 78 Township: 13S Range: 14E

UTM Coordinates: 16N

Drainage Name: Jeanfreau Ditch Reach: 4000 ft

Damage Description: Sediment and Debris from Hurricane Katrina

Section 1D Site Evaluation

All answers in this Section must be YES in order to be eligible for EWP assistance.

Site Eligibility	YES	NO	Remarks
Damage was a result of a natural disaster?*	✓		Hurricane Katrina
Recovery measures would be for runoff retardation or soil erosion prevention?*	✓		Proposed action is to facilitate drainage.
Threat to life and/or property?*	✓		Flooding risk if not complete.
Event caused a sudden impairment in the watershed?*	✓		Reduced capacity in drainage canals.
Imminent threat was created by this event?**	✓		A heavy storm and/or flood could overtop canals.
For structural repairs, not repaired twice within ten years?**	✓		
Site Defensibility			
Economic, environmental, and social documentation adequate to warrant action (Go to pages 3, 4, 5 and 6 ***)	✓		
Proposed action technically viable? (Go to Page 9 ***)	✓		

Have all the appropriate steps been taken to ensure that all segments of the affected population have been informed of the EWP program and its possible effects? YES ☑ NO ☐

Comments: Starting Point Lat. 29.877852 Long. -89.808944
Ending Point Lat. 29.867140 Long. -89.811080

* Statutory
** Regulation
*** DSR Pages 3 through 5 are required to support the decisions recorded on this summary page. If additional space is needed on this or any other page in this form, add appropriate pages.

DSR NO: 087-05-51K

Section 1E Proposed Action

Describe the preferred alternative from Findings: Section 5 A:

The proposed action is the preferred alternative. The proposed action is the least costly alternative that achieves the restoration objectives, maximizes environmental benefits, and is socially acceptable.

Total installation cost identified in this DSR: Section 3:

Section 1F NRCS State Office Review and Approval

Reviewed By: _____ Date Reviewed: 8/17/07
State EWP Program Manager

Approved By: _____ Date Approved: 8/20/07
State Conservationist

PRIVACY ACT AND PUBLIC BURDEN STATEMENT

NOTE: The following statement is made in accordance with the Privacy Act of 1974, (5 U.S.C. 552a) and the Paperwork Reduction Act of 1995, as amended. The authority for requesting the following information is 7 CFR 624 (EWP) and Section 216 of the Flood Control Act of 1950, Public Law 81-516, 33 U.S.C. 701b-1; and Section 403 of the Agricultural Credit Act of 1978, Public Law 95334, as amended by Section 382, of the Federal Agriculture Improvement and Reform Act of 1996, Public Law 104-127, 16 U.S.C. 2203. EWP, through local sponsors, provides emergency measures for runoff retardation and erosion control to areas where a sudden impairment of a watershed threatens life or property. The Secretary of Agriculture has delegated the administration of EWP to the Chief or NRCS on state, tribal and private lands.

Signing this form indicates the sponsor concurs and agrees to provide the regional cost-share to implement the EWP recovery measure(s) determined eligible by NRCS under the terms and conditions of the program authority. Failure to provide a signature will result in the applicant being unable to apply for or receive a grant the applicable program authorities. Once signed by the sponsor, this information may not be provided to other agencies. IRS, Department of Justice, or other State or Federal Law Enforcement agencies, and in response to a court or administrative tribunal.

The provisions of criminal and civil fraud statutes, including 18 U.S.C. 286, 287, 371, 641, 651, 1001; 15 U.S.C. 714m; and 31 U.S.C. 3729 may also be applicable to the information provided. According to the Paperwork Reduction Act of 1995, an agency may not conduct or sponsor, and a person is not required to respond to a collection of information unless it displays a valid OMB control number. The valid OMB control number for this information collection is 0578-0030. The time required to complete this information collection is estimated to average 117/1.96 minutes/hours per response, including the time for reviewing instructions, searching existing data sources, field reviews, gathering, designing, and maintaining the data needed, and completing and reviewing the collection information.

USDA NONDISCRIMINATION STATEMENT

"The U.S. Department of Agriculture (USDA) prohibits discrimination in all its programs and activities on the basis of race, color, national origin, age, disability, and where applicable, sex, martial status, familial status, parental status, religion, sexual orientation, genetic information, political beliefs, reprisal, or because all or part of an individual's income is derived from any public assistance program. (Not all prohibited bases apply to all programms.) Persons with disabilities who require alternative means for communication of program information (Braille, large print, audiotape, etc.) should contact USDA's TARGET Center at (202)720-2600 (vocie and TDD). To file a complaint of discrimination, write to USDA, Director, Office of Civil Rights, 1400 Independence Avenue, SW., Washington, DC 20250-9410, or call (800)795-3272 (voice) or (202) 720-6382 (TDD). USDA is an equal opportunity provider and employer.

Civil Rights Statement of Assurance

The program or activities conducted under this agreement will be in compliance with the nondiscrimination provisions contained in the Titles VI and VII of the Civil Rights Act of 1964, as amended; the Civil Rights Restoration Act of 1987 (Public Law 100-259); and other nondiscrimination statutes: namely, Section 504 of the Rehabilitation Act of 1973, Title IX of the Amendments of 1972, the Age Discrimination Act of 1975, and the Americans with Disabilities Act of 1990. They will also be in accordance with regulations of the Secretary of Agriculture (7 CFR 15, 15a, and 15b), which provide that no person in the United States shall on the grounds of race, color, national origin, gender, religion, age or disability, be excluded from participation in, be denied the benefits of, or otherwise subjected to discrimination under any program or activity receiving Federal financial assistance from the U.S. Department of Agriculture or any agency thereof.

DSR NO: 087-05-51K

Section 2 Environmental Evaluation

2A Resource Concerns	2B Existing Condition	2C Alternative Designation		
		Proposed Action	No Action	Alternative
		Dredge sediment and debris from canal to pre-storm capacity and haul off to an approved landfill.	Leave debris and sediment in canal.	Remove and dispose of debris; sediment removed and along bank.
		2D Effects of Alternatives		
Soil				
Channel Sediment	Average depth: 1 ft estimate .0007 Mill Tons/Acre	1 ft of sediment removal	Storm sediment remains.	1 ft of sediment removal
Water Erosion of Soils	Bank is mostly covered with herb. veg. and downed wood.	Removal of downed trees could stabilize soil.	Downed trees present erosion concern.	Rem. of trees could stabilize soil.
Water				
Downstream water rights	Would not have to drain or blockage drainage for removal.	Would not have to drain or blockage drainage for removal.	N/A	Would not have to drain or blockage drainage for removal.
Turbidity	Water is currently very opaque.	Short term increase during dredging. Long term normal.	Water is currently very opaque.	Short term increase during dredging. Long term normal.
DO	Not tested, but likely low due to high temps and low biol. action.	May have a long term positive affect to DO.	N/A	DO will remain at current levels or increase with vegetation.
Water Quality	Decreased quality due to contamination from flood.	Short-term negative via mixing, long-term positive via removal.	Decreased quality due to contamination from flood.	Short-term negative via mixing, long-term positive via removal.
Air				
Particulate Matter	No particulate matter.	Short-term negative effect from use of dredging equipment.	No particulate matter.	Short-term negative effect from use of dredging equipment.
Plant				
Emergent / Aquatic Vegetation	Poor due to sedimentation, contamination and disturbance	Any existing veg. would be lost short-term, but would grow back	Vegetation would eventually grow back and bioremediate.	Any existing veg. would be lost short-term, but would grow back
Sensitive Species	None present or noted in project area during site visit.	None present or noted in project area during site visit.	None present or noted in project area during site visit.	None present or noted in project area during site visit.
Animal				
Species Diversity	Only species that withstood the storm, flood, and contamination	Reduction of cover and basking reduces herp, bird, and fish hab	Habitat heterogeneity would increase diversity after disturb.	Reduction of cover and basking reduces herp, bird, and fish hab
Sensitive Species	None present or noted in project area during site visit.	None present or noted in project area during site visit.	None present or noted in project area during site visit.	None present or noted in project area during site visit.
Other				
Aesthetics	Poor due to garbage, debris, and disturbed soil.	Removal of garbage positive.	Poor.	Removal of garbage positive.

DSR NO: 087-05-51K

Section 2E Special Environmental Concerns

Resource Consideration	Existing Condition	Alternatives and Effects		
		Proposed Action	No Action	Alternative
Clean Water Act Waters of the U.S.	USACE jurisdiction - sedimentation decreases channel capacity.	USACE permit required. Improve water quality and restore functionality.	No permit required. Channel capacity altered	USACE permit required. Improve water quality and restore functionality.
Coastal Zone Management Areas	Located in CZMA. Drainage impaired.	CZMA Consistency Authorization required.	Located in CZMA. Drainage impaired.	CZMA Consistency Authorization required.
Coral Reefs	N/A	N/A	N/A	N/A
Cultural Resources	(FOTG II) None observed on site. Cross reference with state archeologist.	(FOTG II) None observed on site. Cross reference with state archeologist.	(FOTG II) None observed on site. Cross reference with state archeologist.	(FOTG II) None observed on site. Cross reference with state archeologist.
Endangered and Threatened Species	(FOTG II) No endangered species affected by the proposed action.	(FOTG II) No endangered species affected by the proposed action.	(FOTG II) No endangered species affected by the proposed action.	(FOTG II) No endangered species affected by the proposed action.
Environmental Justice	N/A	N/A	N/A	N/A
Essential Fish Habitat	No EFH - reference NOAA	No EFH - reference NOAA	No EFH - reference NOAA	No EFH - reference NOAA
Fish and Wildlife Coordination	No stream modification or alteration will be conducted. Hydrology will be restored to pre-stream capacity.	No coordination with FWS would be necessary.	No coordination with FWS would be necessary.	No coordination with FWS would be necessary.
Floodplain Management	In Mississippi River floodplain / delta. Levees reduce flooding. Water levels are 8 ft below sea level.	Would increase capacity and flow of canals and maintain designed use of flood control.	No action would allow water to cover natural floodplain, with risks to life and property	Would increase capacity and flow of canals and maintain designed use of flood control.
Invasive Species	Chinese tallow is present and spreading on the banks.	Disturbance of banks and vegetation removal could hasten the spread of this species.	No effect.	Disturbance of banks and vegetation removal could hasten the spread of this speci
Migratory Birds	Marginal migratory habitat adjacent to channel. Sediment is not effecting migratory habitat.	There may be a short-tern negative impact if work occurs during migration.	Marginal habitat will partially restore and become more useful.	There may be a short-tern negative impact if work occurs during migration.
Natural Areas	None present (FOTG II)	None present (FOTG II)	None present (FOTG II)	None present (FOTG II)
Prime and Unique Farmlands	(FOTG II) Ditch is adjacent to Sh, Co and Cm soil which is listed as P&U farmland.	(FOTG II) Ditch is adjacent to Sh, Co and Cm soil which is listed as P&U farmland.	(FOTG II) Ditch is adjacent to Sh, Co and Cm soil which is listed as P&U farmland.	(FOTG II) Ditch is adjacent to Sh, Co and Cm soil which is listed as P&U farmland.
Riparian Areas	Downed trees would decompose and semi-natural habitat would return over time.	Removal of downed wood could represent a short-term negative effect to the riparian area.	Downed trees would decompose and semi-natural habitat would return over time.	Removal of downed wood could represent a short-term negative effect to the riparian area.
Scenic Beauty	N/A	N/A	N/A	N/A
Wetlands	N/A	N/A	N/A	N/A
Wild and Scenic Rivers	(FOTG II) LDWF scenic streams list and none present.	(FOTG II) LDWF scenic streams list and none present.	(FOTG II) LDWF scenic streams list and none present.	(FOTG II) LDWF scenic streams list and none present.

Completed By: Kris Davis Date: 11/03/2006

DSR NO: 087-05-51K

Section 2F Economic

This section must be completed by each alternative considered (attach additional sheets as necessary).

	Future Damages ($)	Damage Factor (%)	Near Term Damage Reduction
Properties Protected (Private)			
2 Houses @ 300,000.00	600,000.00	20	120,000.00
10 Houses @ 30,000.00	300,000.00	20	60,000.00
(All Houses noted on channel where inhabited)			
Properties Protected (Public)			
Business Losses			
Other			
Total Near Term Damage Reduction $			180,000.00
Net Benefit (Total Near Term Damage Reduction minus Cost from Section 3)			

Completed By: Kris Davis Date: 11/03/2006

Section 2G Social Consideration This section must be completed by each alternative considered

(attach additional sheets as necessary).

	YES	NO	Remarks
Has there been a loss of life as a result of the watershed impairment?	☐	✔	Hurricane Katrina overtopped the levees, which caused a loss of life.
Is there the potential for loss of life due to damages from the watershed impairment?	✔	☐	Proposed action would prevent future losses.
Has access to a hospital or medical facility been impaired by watershed impairment?	☐	✔	No, but possible in large storm.
Has the community as a whole been adversely impacted by the watershed impairment (life and property ceases to operate in a normal capacity)	☐	✔	The community as a whole is already severely adversely impacted from the levee overtopping.
Is there a lack or has there been a reduction of public safety due to watershed impairment?	✔	☐	Drainage canals would not function as designed during a large storm and/or flood. The impairment would cause threats to life and property more quickly.

Completed By: Kris Davis Date: 11/03/2006

DSR NO: _____
087-05-51K

Section 2H Group Representation and Disability Information

This section is completed only for the preferred alternative selected.

Group Representation	Number
American Indian/Alaska Native Female Hispanic	
American Indian/Alaska Native Female Non-Hispanic	
American Indian/Alaska Native Male Hispanic	
American Indian/Alaska Native Male Non-Hispanic	
Asian Female Hispanic	
Asian Female Non-Hispanic	
Asian Male Hispanic	
Asian Male Non-Hispanic	
Black or African American Female Hispanic	
Black or African American Female Non-Hispanic	1
Black or African American Male Hispanic	
Black or African American Male Non-Hispanic	1
Hawaiian Native/Pacific Islander Female Hispanic	
Hawaiian Native/Pacific Islander Female Non-Hispanic	
Hawaiian Native/Pacific Islander Male Hispanic	
Hawaiian Native/Pacific Islander Male Non-Hispanic	
White Female Hispanic	
White Female Non-Hispanic	11
White Male Hispanic	
White Male Non-Hispanic	9
Total Group	22

Census tract(s) St. Bernard Parish - 70085 CDP, LA (58% to return)

Completed By: Kris Davis Date: 11/03/2006

DSR NO: 087-05-51K

Section 2I. Required consultation or coordination between the lead agency and/or the RFO and another governmental unit including tribes:

Easements, permissions, or permits:

-Access permission will be required.
-CWA permit will be required (USACE).
-Water Quality Certification will be required (LDEQ).
-Consistency Authorization is needed since project location is in the coastal zone (LDNR-CMD).

Mitigation Description:

-Avoid impacts to adjacent Bottomland Forest Habitat, when present on eastern or western side of canal.
-Dredged sediments should be disposed of off-site in an approved disposal facility for contaminated sediments.
-Removal will be done in consecutive days to minimize impacts to local wildlife.
-If any archaeological or cultural remains are located, contact the NRCS state archaeologist immediately and cease work in that area.
-If feasible, leave periodic basking logs for turtles and alligators.
-For seeding follow NRCS Standard 342 Critical Area Planting.

Agencies, persons, and references consulted, or to be consulted:

U.S. Army Corps of Engineers
LDWF
St. Bernard Parish Government
LDNR
Private Landowners
LDEQ
USFWS

DSR NO: 087-05-51K

Section 3 Engineering Cost Estimate

Completed By: Darron Cooper Date: 11/01/2006

This section must be completed by each alternative considered (attach additional sheets as necessary).

Proposed Recovery Measure (including mitigation)	Quantity	Units	Unit Cost ($)	Amount ($)
				0.00
Sediment Removal	4000	LF		
Mobilization	1	LS		
Seeding	1	LS		
Traffic Control	1	LS		
				0.00
				0.00
				0.00
				0.00
				0.00
				0.00
				0.00
				0.00
				0.00
				0.00
				0.00
				0.00
				0.00
				0.00
Total Installation Cost (Enter in Section 1F)$				

Unit Abbreviations:

AC	Acre	LS	Lump Sum
CY	Cubic Yard	SF	Square Feet
EA	Each	SY	Square Yard
HR	Hour	TN	Ton
LF	Linear Feet	Other (Specifiy)	

DSR NO: 087-05-51K

Section 4 NRCS EWP Funding Priority

Complete the following section to compute the funding priority for the recovery measures in this application (see instructions on page 10).

Priority Ranking Criteria	**Yes**	**No**		**Ranking Number Plus Modifer**
1. Is this an exigency situation?	☐	☐		
2. Is this a site where there is serious, but not immediate threat to human life?	☑	☐		2e
3. Is this a site where buildings, utilities, or other important infrastructure components are threatened?	☐	☐		
4. Is this site a funding priority established by the NRCS Chief?	☐	☐		
The following are modifiers for the above criteria			**Modifier**	
a. Will the proposed action or alternatives protect or conserve federally-listed threatened and endangered species or critical habitat?				
b. Will the proposed action or alternatives protect or conserve cultural sites listed on the National Register of Historic Places?				
c. Will the proposed action or alternatives protect or conserve prime or important farmland?				
d. Will the proposed action or alternatives protect or conserve existing wetlands?				
a. Will the proposed action or alternatives maintain or improve current water quality conditions?			e	
f. Will the proposed action or alternatives protect or conserve unique habitat, including but not limited to, areas inhabited by State-listed species, fish and wildlife management area, or State identified sensitive habitats?				

Enter priority computation in Section 1A, NRCS Entry, Funding priority number.

Remarks:

DSR NO: 087-05-51K

Section 5A Findings

Finding: Indicate the preferred alternative from Section 2 (Enter to Section 1E):

The proposed action is the preferred alternative. The proposed action is the least costly alternative that achieves the restoration objectives, maximizes environmental benefits, and is socially acceptable.

I have considered the effects of the action and the alternatives on the Environmental Economic, Social; the Special Environmental Concerns; and the extraordinary circumstances (40 CFR 1508.27). I find for the reasons stated below, that the preferred alternative:

✓ Has been sufficiently analyzed in the EWP PEIS (reference all that apply)
Chapter 5.2.2.1.2
Chapter _____
Chapter _____
Chapter _____
Chapter _____

____ May require the preparation of an environmental assessment or environmental impact statement.
The action will be referred to the NRCS State Office on this date:

NRCS representative of the DSR team

Title: District Conservationist. Michael Jordan Date: 4/17/07.

Section 5B Comments:

Section 5C

Sponsor Concurrence:

Sponsor Representative

Title: Henry Ryan Date: _____

Section 6 Attachments:

A. Location Map
B. Site Plan or Sketches
C. Other (explain)

5.2.2.1.2

JEANFREAU DITCH
DSR 087-05-051K

EMERGENCY REPAIR
BUILT UNDER THE
EMERGENCY WATERSHED PROTECTION PROGRAM
BY ST. BERNARD PARISH
WITH THE ASSISTANCE OF THE
NATURAL RESOURCES CONSERVATION SERVICE
OF THE
UNITED STATES DEPARTMENT OF AGRICULTURE
2007

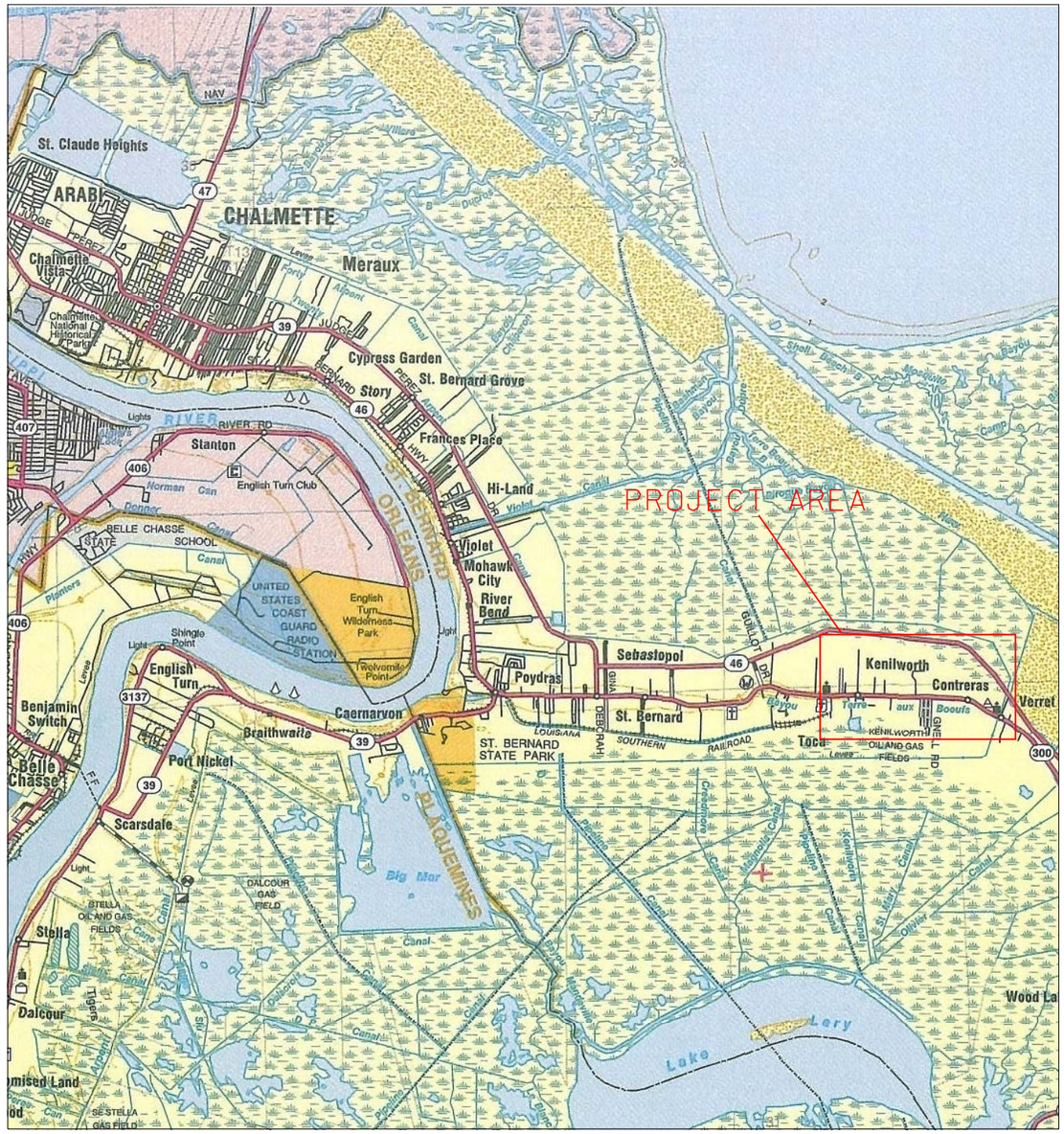

MAPS COPYRIGHT "THE ROADS OF LOUISIANA", SHEARER PUBLISHING

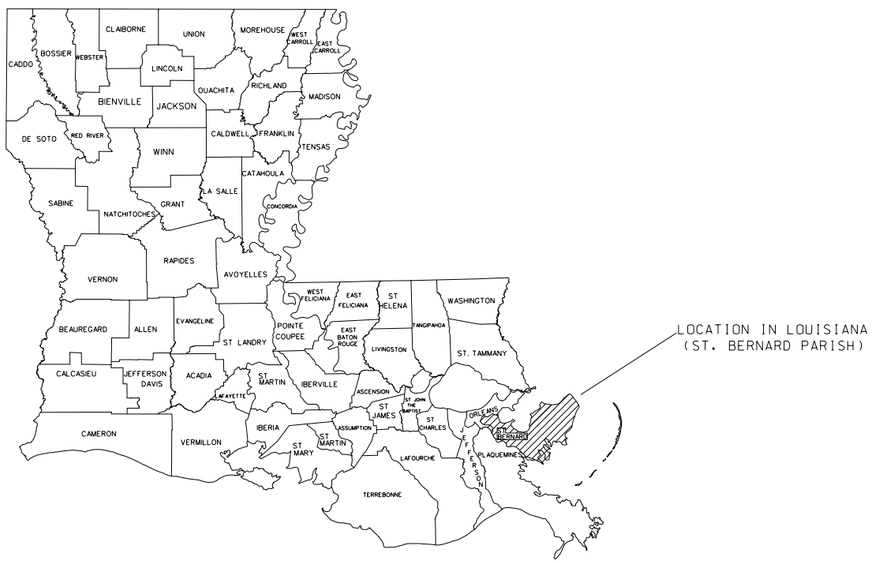

LOCATION IN LOUISIANA
(ST. BERNARD PARISH)

VICINITY MAP
DSR-087-05-051K
JEANFREAU DITCH

5000 0 5000 10000 15000 20000
SCALE IN FEET

INDEX TO DRAWINGS

1. COVER AND VICINTY MAP
2. SITE LOCATION MAP
3. PLAN & PROFILE-STA. 0+00 THRU 42+34
4. TYPICAL-DEBRIS & SEDIMENT REMOVAL
5. X-SECTIONS-STATION 0+00 THRU 5+54
6. X-SECTIONS-STATION 10+02 THRU 12+13
7. X-SECTIONS-STATION 33+61 THRU 42+34

REVISIONS			
NO.	DATE	APPROVED	TITLE

		DATE
DESIGNED	G. BURNS	05/07
DRAWN	J. FREDERICK/C. WALDE	05/07
CHECKED	C. LAFLEUR	07/07
APPROVED	E.J. GIERING III	07/07

COVER SHEET & VICINTY MAP
EWP - HURRICANE KATRINA
DSR-087-05-051K JEANFREAU DITCH
ST. BERNARD PARISH, LOUISIANA

NRCS
Natural Resources Conservation Service
United States Department of Agriculture

FILE NAME
JEANFREAU

DRAWING NAME
LA-087-05-051K01

SHEET 01 OF 07

...\Drawings\87-05-051K01.dgn 8/14/2007 10:40:56 AM

– – – – PROJECT ACCESS

POSSIBLE SPOIL PLACEMENT

SITE LOCATION MAP
CENTERLINE JEANFREAU DITCH
DSR# 087-05-051K

300 0 300 600 900 1200
SCALE IN FEET

NOTICE:
96 HOURS BEFORE DIGGING
CALL 1-800-272-3020

TBM LOCATION
N. 504391.029
E. 3763431.755
ELEV. 5.18
PINK CIRCLE LOCATED ON DRIVEWAY SOUTH OF HWY 46, 500 FT WEST OF WORKSITE. ADDRESS IS 2920.

CENTERLINE LOCATION

BEGIN CONSTRUCTION	END CONSTRUCTION
STA. 0+00	STA. 42+34
N500418.548	N504278.513
E3763310.964	E6763954.558

ESTIMATED QUANTITIES	
SEDIMENT REMOVAL	3,140 C.Y.
DEBRIS REMOVAL	4,234 L.F.

REVISIONS			
NO.	DATE	APPROVED	TITLE

		DATE
DESIGNED	G. BURNS	05/07
DRAWN	J. FREDERICK/C.WALDE	05/07
CHECKED	C. LAFLEUR	07/07
APPROVED	E.J. GIERING III	07/07

SITE LOCATION MAP
DSR-087-05-051K
CHANNEL DEBRIS AND SEDIMENT REMOVAL
ST. BERNARD PARISH, LOUISIANA

NRCS
Natural Resources Conservation Service
United States Department of Agriculture

FILE NAME
JEANFREAU DITCH

DRAWING NAME
087-05-051K02

SHEET 02 OF 07

...\Drawings\87-05-051K02.dgn 8/14/2007 10:42:55 AM

NOTICE:
96 HOURS BEFORE DIGGING
CALL 1-800-272-3020
TO LOCATE UTILITIES

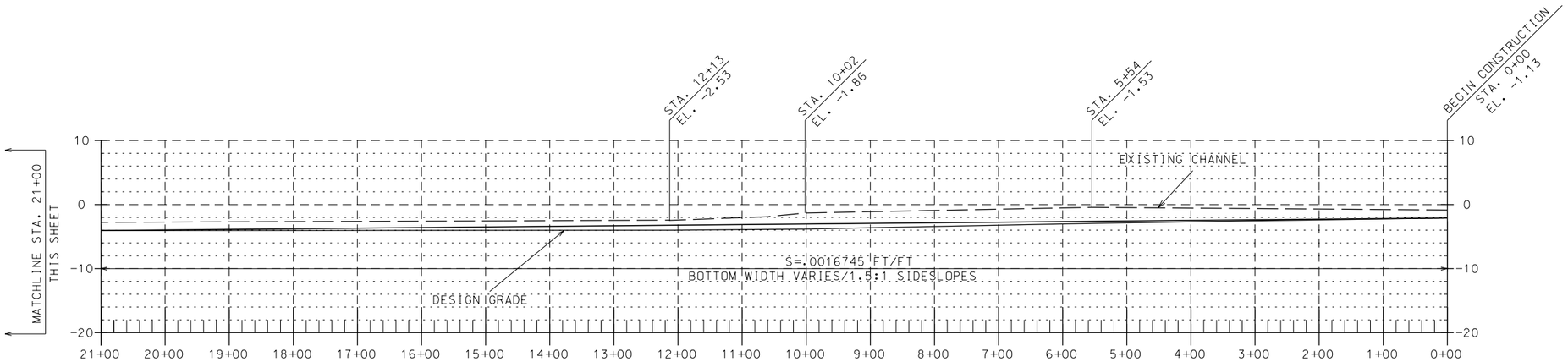

CENTERLINE PROFILE
JEANFREAU DITCH
STA. 0+00 THROUGH 21+00
DSR #087-05-051K

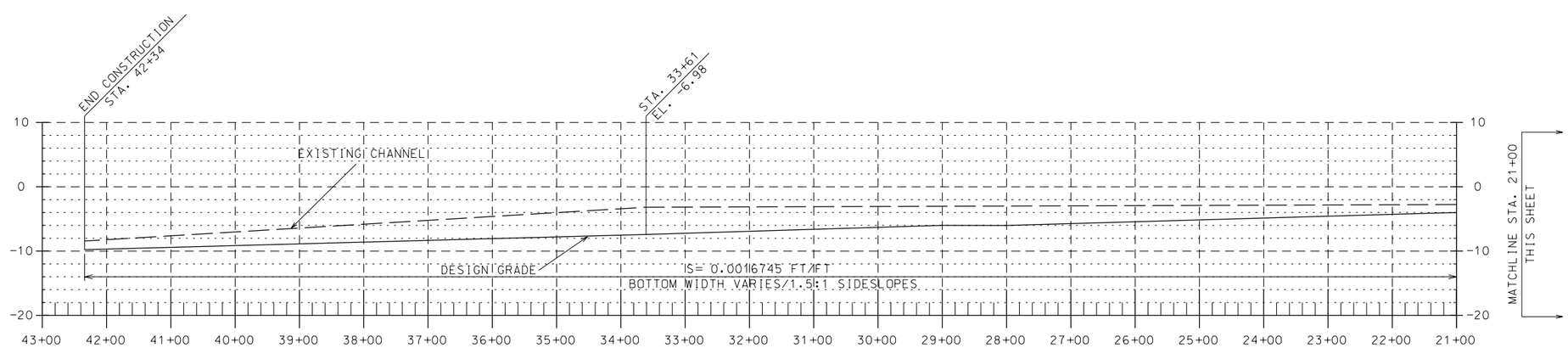

CENTERLINE PROFILE
JEANFREAU DITCH
STA. 21+00 THROUGH 42+34
DSR #087-05-051K

REVISIONS			
NO.	DATE	APPROVED	TITLE

		DATE
DESIGNED	G. BURNS	06/07
DRAWN	G. BURNS/J. FREDERICK	06/07
CHECKED	C. LAFLEUR	07/07
APPROVED	E. J. GIERING III	07/07

CENTERLINE PROFILE
DSR-087-05-051K
CHANNEL DEBRIS AND SEDIMENT REMOVAL
JEANFREAU
ST. BERNARD PARISH, LOUISIANA

NRCS
Natural Resources Conservation Service
United States Department of Agriculture

FILE NAME
JEANFREAU

DRAWING NAME
087-05-051K-03

SHEET 03 OF 07

...\Drawings\87-05-051K03.dgn 8/14/2007 10:51:00 AM

NOTICE:
96 HOURS BEFORE DIGGING
CALL 1-800-272-3020

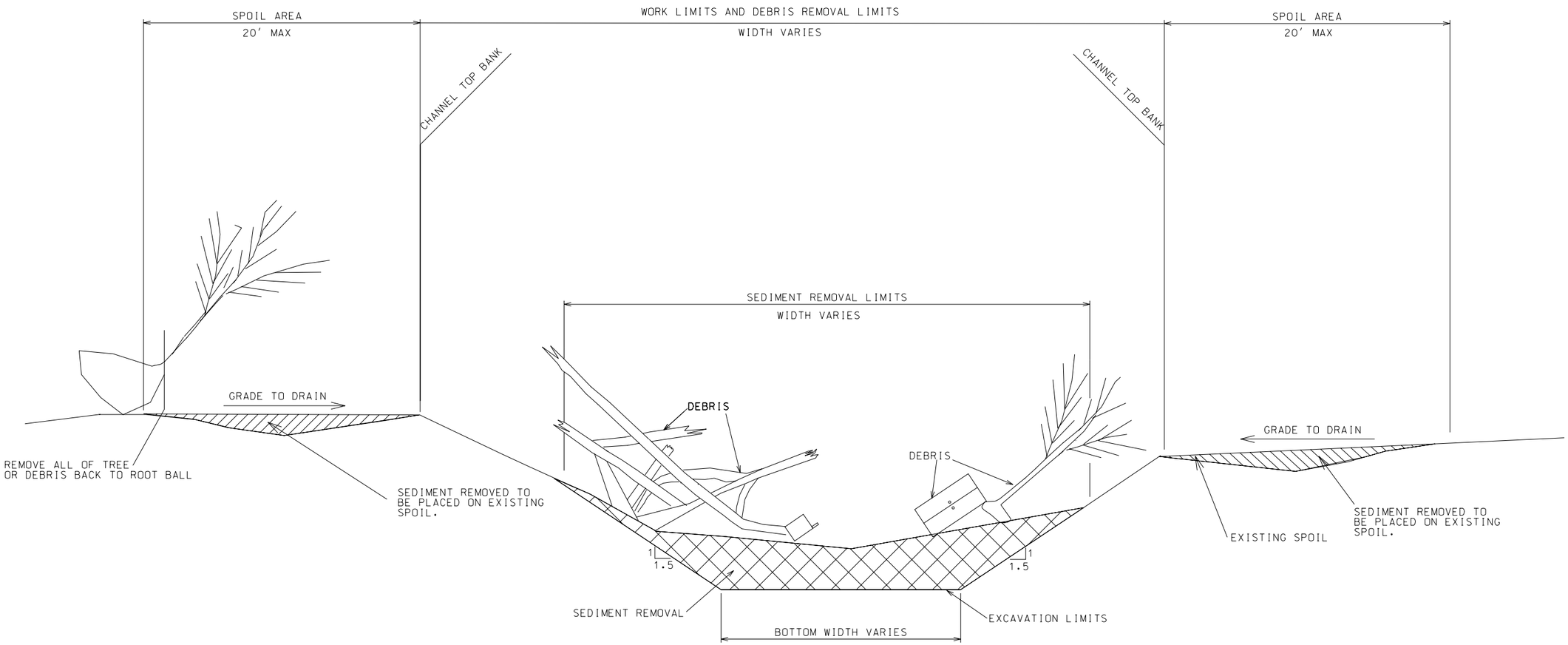

TYPICAL CHANNEL DEBRIS/SEDIMENT REMOVAL

JEANFREAU DITCH

NOTES

1. ALL DEBRIS WITHIN THE WORK/REMOVAL LIMITS SHALL BE REMOVED, LOADED, AND HAULED TO AN APPROPRIATE DISPOSAL SITE AS STATED IN THE SPECIFICATIONS.
2. IT MAY BE POSSIBLE THAT TREES OR DEBRIS WHICH WERE LOCATED OUTSIDE OF THE REMOVAL LIMITS MAY HAVE FALLEN INTO THE REMOVAL LIMITS. THOSE TREES SHALL BE CUT BACK TO THE ROOT BALL AND REMOVED IN THEIR ENTIRETY.
3. CLEARING OF UNDAMAGED WOODY VEGETATION IN DESIGNATED SPOIL PLACEMENT AREA SHALL BE LIMITED TO ONLY THAT NECESSARY FOR PLACEMENT OF THE REMOVED SEDIMENT.
4. SPOIL THAT CANNOT BE PLACED WITHIN THE WORK LIMITS IN AN AREA OF EXISTING SPOIL BANK OR AS OTHERWISE APPROVED BY THE COTR SHALL BE HAULED OFF-SITE TO AN APPROVED DISPOSAL LOCATION WITH THE FOLLOWING EXCEPTION. LIVING LIVE OAK TREES SHALL NOT BE DESTROYED OR REMOVED. SPOIL SHALL NOT BE PLACED WITHIN THE DRIPLINE OF ANY LIVE OAK TREES. SPOIL PLACED OUTSIDE THE DRIP LINE OF THE LIVE OAK TREES SHALL BE DRESSED AND GRADED SUCH THAT IMPOUNDED WATER AROUND ANY LIVE OAK TREE WILL NOT OCCUR.
5. THERE IS A DISPOSAL SITE LOCATED AT GENTILLY LANDFILL, 10200 ALMONSTAER BLVD. NEW ORLEANS. THIS SITE IS FOR "CLEAN" SPOIL ONLY.
6. THE CHANNEL BOTTOM WIDTHS SHOWN ON THE X-SECTIONS ARE ESTIMATED. ACTUAL BOTTOM WIDTHS WILL VARY BASED ON SITE CONDITIONS. TOP OF BANK AND EXISTING SLOPES NEAR TOP BANK SHALL REMAIN. CONSTRUCTED SLOPES NEAR THE CHANNEL BOTTOM SHALL BE EXCAVATED AT A 1.5 HORIZONTAL TO 1 VERTICAL (1.5H:1V) SLOPE SIDE UNTIL PLANNED BOTTOM GRADE IS REACHED. THE ACTUAL CHANNEL BOTTOM WIDTH WILL BE THE DISTANCE REMAINING BETWEEN THE SIDESLOPES AT THE PLANNED BOTTOM ELEVATION AND MAY NOT BE THE ORIGINAL ESTIMATED BOTTOM WIDTH SHOWN ON THE X-SECTIONS.

REVISIONS			
NO.	DATE	APPROVED	TITLE

		DATE
DESIGNED	G. BURNS	05/07
DRAWN	J. FREDERICK/C. WALDE	05/07
CHECKED	C. LAFLEUR	07/07
APPROVED	E.J. GIERING III	07/07

TYPICAL-CHANNEL DEBRIS/SEDIMENT REMOVAL
DSR-087-05-051K/JEANFREAU DITCH
ST. BERNARD PARISH, LOUISIANA

NRCS
Natural Resources Conservation Service
United States Department of Agriculture

FILE NAME
JEANFREAU

DRAWING NAME
087-05-051K-04

SHEET 04 OF 07

...\Drawings\87-05-051K04.dgn 8/14/2007 10:44:48 AM

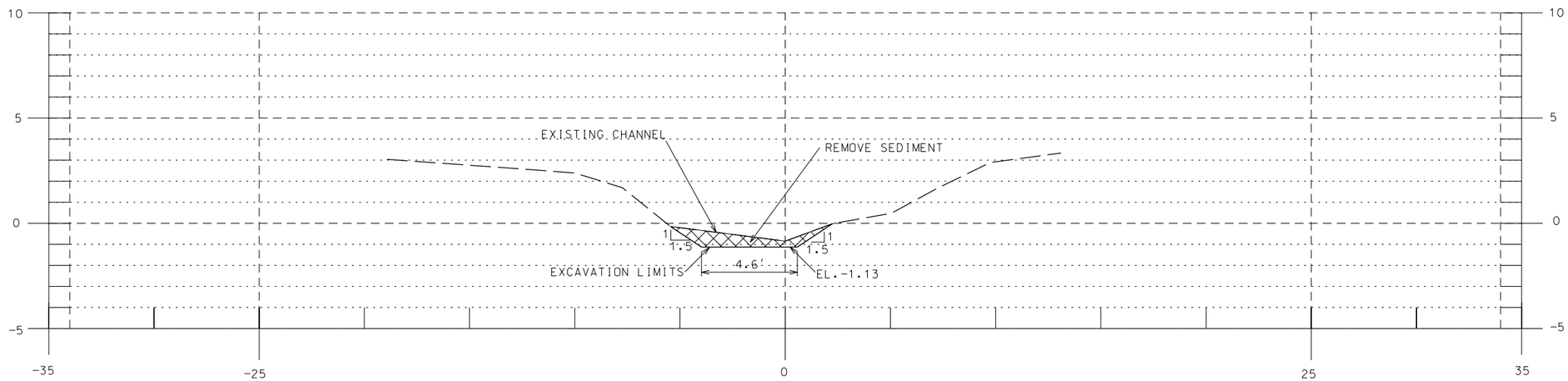

STATION 0+00

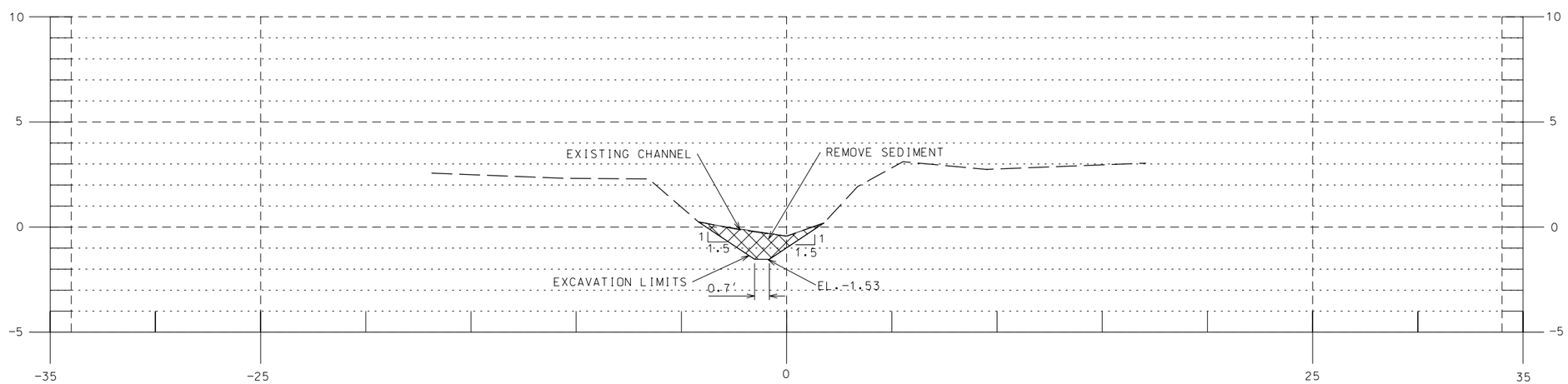

STATION 5+54

NOTICE:
96 HOURS BEFORE DIGGING
CALL 1-800-272-3020
TO LOCATE UTILITY LINES

REVISIONS			
NO.	DATE	APPROVED	TITLE

		DATE
DESIGNED	G. BURNS	06/07
DRAWN	J. FREDERICK/C. WALDE	06/07
CHECKED	C. LAFLEUR	06/07
APPROVED	E.J.GIERING III	06/07

X-SECTIONS
DSR-87-05-051K
CHANNEL DEBRIS AND SEDIMENT REMOVAL
ST. BERNARD PARISH, LOUISIANA

NRCS
Natural Resources Conservation Service
United States Department of Agriculture

FILE NAME
JEANFREAU

DRAWING NAME
87-05-051K-05

SHEET 05 OF 07

...\Drawings\87-05-051K05.dgn 8/14/2007 10:45:21 AM

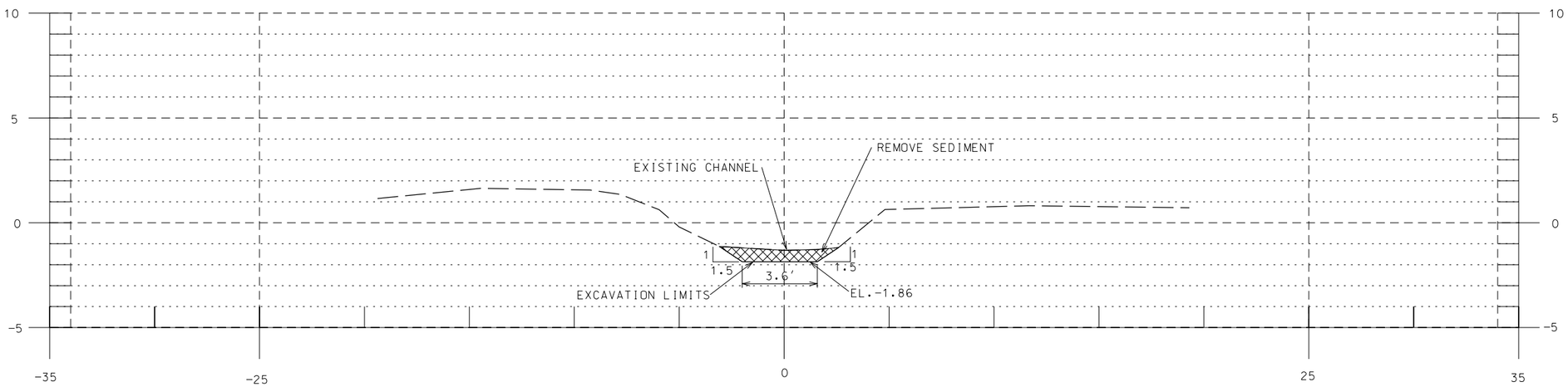

STATION 10+02

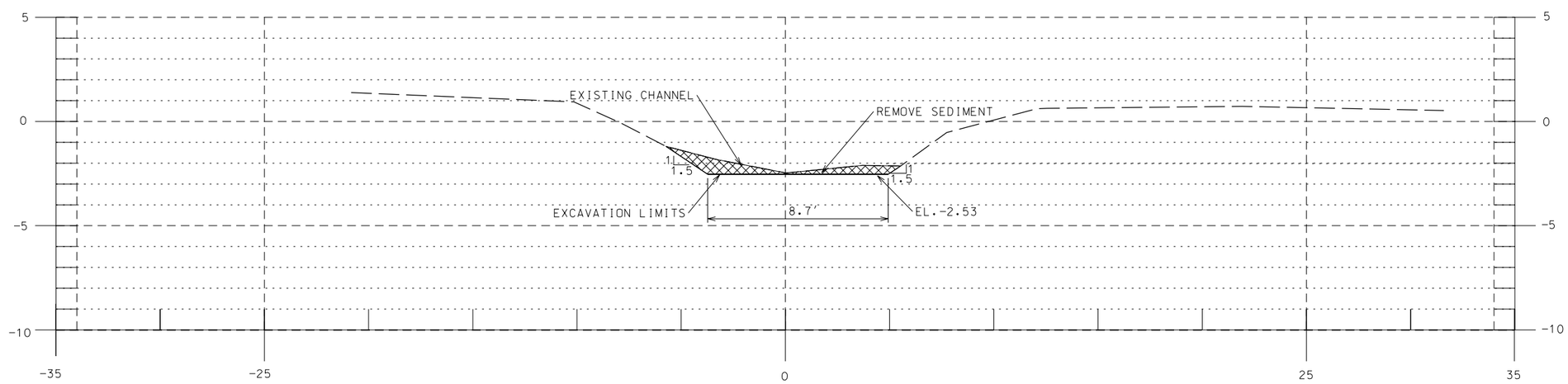

STATION 12+13

NOTICE:
96 HOURS BEFORE DIGGING
CALL 1-800-272-3020
TO LOCATE UTILITY LINES

REVISIONS			
NO.	DATE	APPROVED	TITLE

		DATE
DESIGNED	G. BURNS	06/07
DRAWN	J. FREDERICK/C. WALDE	06/07
CHECKED	C. LAFLEUR	06/07
APPROVED	E.J.GIERING III	06/07

X-SECTIONS
DSR-87-05-051K
CHANNEL DEBRIS AND SEDIMENT REMOVAL
ST. BERNARD PARISH, LOUISIANA

NRCS
Natural Resources Conservation Service
United States Department of Agriculture

FILE NAME
JEANFREAU

DRAWING NAME
87-05-051K-06

SHEET 06 OF 07

...\Drawings\87-05-051K06.dgn 8/14/2007 10:46:07 AM

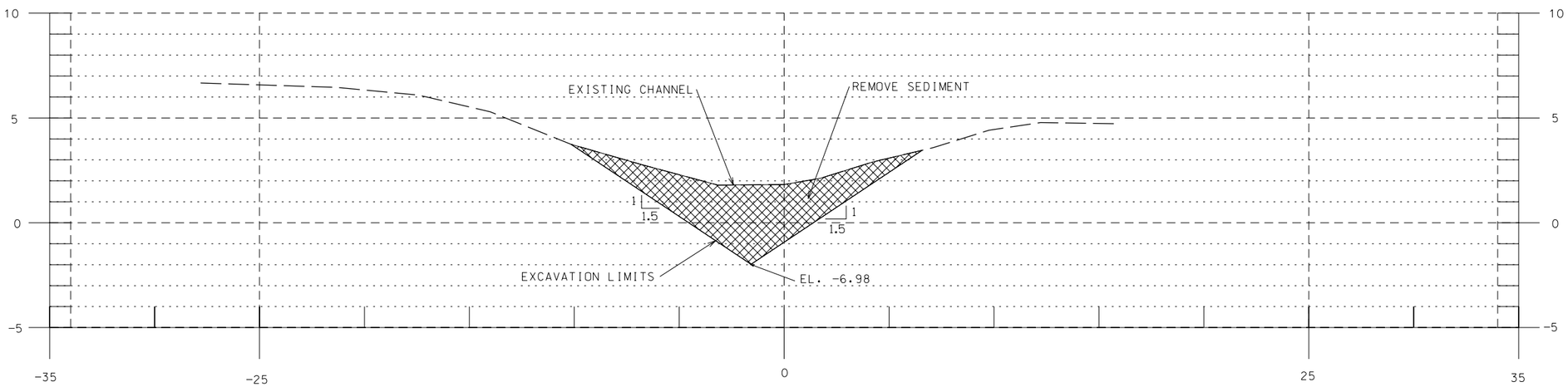

STATION 33+61

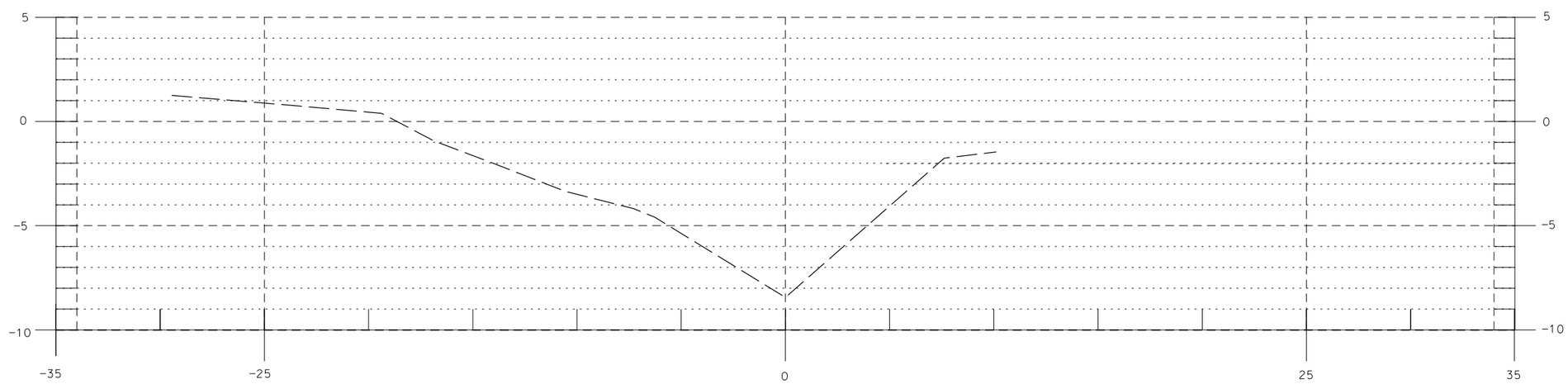

STATION 42+34

NOTICE:
96 HOURS BEFORE DIGGING
CALL 1-800-272-3020
TO LOCATE UTILITY LINES

REVISIONS			
NO.	DATE	APPROVED	TITLE

		DATE
DESIGNED	G. BURNS	06/07
DRAWN	J. FREDERICK/C. WALDE	06/07
CHECKED	C. LAFLEUR	07/07
APPROVED	E.J.GIERING III	07/07

X-SECTIONS
DSR-87-05-051K
CHANNEL DEBRIS AND SEDIMENT REMOVAL
ST. BERNARD PARISH, LOUISIANA

NRCS
Natural Resources Conservation Service
United States Department of Agriculture

FILE NAME
JEANFREAU

DRAWING NAME
87-05-051K-07

SHEET 07 OF 07

...\Drawings\87-05-051K07.dgn 8/14/2007 10:54:22 AM

DSR 087-05-051K
Jeanfreau Ditch
St. Bernard Parish, LA

CONSTRUCTION SPECIFICATIONS

NUMBER	TITLE	PAGE	THROUGH
SP	Special Provisions	1 of 2	2 of 2
5	Pollution Control	5-1	5-6
SWPPP	Draft Storm Water Pollution Prevention Plan	SWPPP-1	SWPPP-8
SCACR	Completion Report LAR 200000	1 of 1	1 of 1
6	Seeding, Sprigging and Mulching	6-1	6-5
7	Construction Surveys	7-1	7-6
8	Mobilization and Demobilization	8-1	8-2
9	Traffic Control	9-1	9-4
202	Channel Excavation, Sediment Removal	202-1	202-4
203	Channel Obstruction Removal	203-1	203-4

DRAWINGS 1 of ?? ?? of ??

SPECIAL PROVISIONS

1. Not all pipelines and other utilities are shown on the plans. It is the responsibility of the contractor to contact **Louisiana One Call at 1-800-272-3020** and the appropriate owner of any utility within the work area to assist him/her in the location of unmarked utilities prior to the start of his/her work. **The contractor shall provide the COTR the Louisiana One Call ticket number prior to the start of any excavation activities.**

2. **Public Property Right of Entry** – Permission and approval to access the channel from public property (i.e. streets, parks, local government parking lots, etc) or utilize public property as contractor staging areas shall be obtained by contacting the Parish Engineer.

   Logan Martin, Parish Engineer
   Office: 504-278-4314

3. **Abandoned Vehicle Point of Contact -** At least 24 hours prior to the removal of an abandoned vehicle or vessel such as automobiles, trailers, mobile homes, motorcycles, boats, etc from the channel, notification shall be made to the Parish Engineer so that arrangements can be made for proper disposal of the vehicle or vessel.

   Logan Martin, Parish Engineer
   Office: 504-278-4314

4. When performing work in the vicinity of utilities and/or other structures the contractor shall take extreme care not to damage said utilities and/or structures. Any damages resulting from improper construction will be the responsibility of the contractor, and repairs of such damages will be made by the contractor at his/her expense. The contractor shall further restore at his/her own expense all injured property caused by any negligent act of omission or commission on his/ her part or on the part of his/her agent, including sidewalks, curbing, sodding, shrubs, pipes, conduits, sewers, buildings, fences, property boundary markers, bridges, retaining walls, tanks, power lines, levees or any other building or private property to a condition as good as it was when he/she entered upon the right of way.

5. The convenience of the general public and of residents along the work shall be provided for in a reasonably adequate and satisfactory manner. Where existing roads are not available for use as detours, all traffic shall be permitted to pass through the work. In such cases the vehicles of the traveling public shall have precedence over the contractor's vehicles to the end that the traveling public's vehicles shall not be unduly delayed for the convenience of the contractor. The contractor shall provide and station competent flagmen whose sole duties shall consist of directing and controlling the movement of public traffic either through or around the work. A flagman shall also be stationed wherever equipment, trucks, etc., enter or leave a thoroughfare from the construction area. The design and application of all signals, pavement markings, channelizing devices and warning sign shall conform to the most current edition, as revised of the " Louisiana Manual on Uniform Traffic Control Devices."

6. The contractor shall arrange his/her work so that no undue or prolonged blocking of business establishments or private residences will occur. Material and equipment stored on the right of way and project site shall be so placed, and the work at all times shall be so conducted, as to insure minimum danger and obstruction to the traveling public.

7. In the event of any adverse weather condition such as a tropical storm, the contractor shall take the necessary precautions to insure that his equipment will not decrease the capacity of any drainage channels in the vicinity or damage any pumping stations or protection levees in the vicinity of his construction operations. Pumping stations, bridges or other structures shall not be utilized as mooring anchorages for equipment.

8. When transporting equipment, supplies, and material to and from the construction site, the contractor shall take the most direct route when leaving a major thoroughfare. When transporting high water content spoil the contractor shall utilize "water tight" trailers to prevent leakage of the material outside of

the project work limits. The contractor shall be responsible for the clean up and proper disposal of leaked or spilled materials from his equipment.

9. Fire hydrants shall be accessible at all times to the Fire Department. No materials or other obstructions shall be placed closer to a fire hydrant than permitted by ordinances, rules or regulations. In the absence of such ordinances, rules or regulations, obstructions shall not be placed within fifteen (15) feet of a fire hydrant.
10. Material Certifications shall be provided to the Government Representative for all materials used in this contract prior to installation.

Construction Specification 5—Pollution Control

1. Scope

The work consists of installing measures or performing work to control erosion and minimize the production of sediment and other pollutants to water and air from construction activities.

2. Material

All material furnished shall meet the requirements of the material specifications listed in section 8 of this specification.

3. Erosion and sediment control measures and works

The measures and works shall include, but are not limited to, the following:

Staging of earthwork activities—The excavation and moving of soil materials shall be scheduled to minimize the size of areas disturbed and unprotected from erosion for the shortest reasonable time.

Seeding—Seeding to protect disturbed areas shall occur as soon as reasonably possible following completion of that earthwork activity.

Mulching—Mulching to provide temporary protection of the soil surface from erosion.

Diversions—Diversions to divert water from work areas and to collect water from work areas for treatment and safe disposition. They are temporary and shall be removed and the area restored to its near original condition when the diversions are no longer required or when permanent measures are installed.

Stream crossings—Culverts or bridges where equipment must cross streams. They are temporary and shall be removed and the area restored to its near original condition when the crossings are no longer required or when permanent measures are installed.

Sediment basins—Sediment basins collect, settle, and eliminate sediment from eroding areas from impacting properties and streams below the construction site(s). These basins are temporary and shall be removed and the area restored to its original condition when they are no longer required or when permanent measures are installed.

Sediment filters—Straw bale filters or geotextile sediment fences trap sediment from areas of limited runoff. Sediment filters shall be properly anchored to prevent erosion under or around them. These filters are temporary and shall be removed and the area restored to its original condition when they are no longer required or when permanent measures are installed.

Waterways—Waterways for the safe disposal of runoff from fields, diversions, and other structures or measures. These works are temporary and shall be removed and the area restored to its original condition when they are no longer required or when permanent measures are installed.

Other—Additional protection measures as specified in section 8 of this specification or required

by Federal, State, or local government.

4. Chemical pollution

The contractor shall provide watertight tanks or barrels or construct a sump sealed with plastic sheets to dispose of chemical pollutants, such as drained lubricating or transmission fluids, grease, soaps, concrete mixer washwater, or asphalt, produced as a by-product of the construction activities. At the completion of the construction work, sumps shall be removed and the area restored to its original condition as specified in section 8 of this specification. Sump removal shall be conducted without causing pollution.

Sanitary facilities, such as chemical toilets, or septic tanks shall not be located next to live streams, wells, or springs. They shall be located at a distance sufficient to prevent contamination of any water source. At the completion of construction activities, facilities shall be disposed of without causing pollution as specified in section 8 of this specification.

5. Air pollution

The burning of brush or slash and the disposal of other materials shall adhere to state and local regulations.

Fire prevention measures shall be taken to prevent the start or spreading of wildfires that may result from project activities. Firebreaks or guards shall be constructed and maintained at locations shown on the drawings.

All public access or haul roads used by the contractor during construction of the project shall be sprinkled or otherwise treated to fully suppress dust. All dust control methods shall ensure safe construction operations at all times. If chemical dust suppressants are applied, the material shall be a commercially available product specifically designed for dust suppression and the application shall follow manufacturer's requirements and recommendations. A copy of the product data sheet and manufacturer's recommended application procedures shall be provided to the engineer 5 working days before the first application.

6. Maintenance, removal, and restoration

All pollution control measures and temporary works shall be adequately maintained in a functional condition for the duration of the construction period. All temporary measures shall be removed and the site restored to near original condition.

7. Measurement and payment

Method 1—For items of work for which specific unit prices are established in the contract, each item is measured to the nearest unit applicable. Payment for each item is made at the contract unit price for that item. For water or chemical suppressant items used for dust control for which items of work are established in section 8 of this specification, measurement for payment will not include water or chemical suppressants that are used inappropriately or excessive to need. Such payment will constitute full compensation for the completion of the work.

Method 2—For items of work for which lump sum prices are established in the contract, payment is made as the work proceeds and supported by invoices presented by the contractor that reflect actual costs. If the total of all progress payments is less than the lump sum contract price for this item, the balance remaining for this item will be included in the final contract payment. Payment of the lump sum contract price will constitute full compensation for completion of the

work.

Method 3—For items of work for which lump sum prices are established in the contract, payment will be prorated and provided in equal amounts on each monthly progress payment estimate. The number of months used for prorating shall be the number estimated to complete the work as outlined in the contractor's approved construction schedule. The final month's prorate amount will be provided with the final contract payment. Payment as described will constitute full compensation for completion of the work.

All Methods—The following provisions apply to all methods of measurement and payment. Compensation for any item of work described in the contract, but not listed in the bid schedule is included in the payment for the item of work to which it is made subsidiary. Such items, and the items to which they are made subsidiary, are identified in section 8 of this specification.

8. Items of work and construction details

(See next page.)

8. ITEMS OF WORK AND CONSTRUCTION DETAILS

It has been determined that this project comes under the LDEQ Louisiana Pollution Discharge Elimination System (LPDES), and that a Storm Water Pollution Prevention Plan is required for this project since the disturbed area will be greater than 1 acres in size, but less than 5 acres in size. Please note that the rules for LPDES process relative to construction sites are contained in the LAC Title 33:IX.2341. Rules for storm water discharges associated with construction sites covered by general permits are found in LAC Title 33:IX.2345.

Items of work to be performed in conformance with this specification and the construction details therefore are:

a. Subsidiary Item, Pollution Control.

(1) This item shall consist of all work necessary to control erosion and sediment pollution, chemical pollution, water pollution, and air pollution during the period of this contract. The contractor shall perform the work in a manner that will reduce erosion, minimize sediments and other pollutants to the water and streams, and create a minimum of air pollution. As a part of this requirement, a Storm Water Pollution Prevent Plan shall (SWPPP) be developed by the Contractor in compliance with the following sections.

(2) SWPPP Requirements

A. General SWPPP Requirements

The contents of the SWPPP shall address all of the applicable items identified in Part III of Permit No. LAR200000. Attached is a draft copy of an SWPPP the Contractor may used to develop the site specific SWPPP for implementation on this contract.

B. Scope

The purpose of the SWPPP is to control soil erosion and the resulting sediment from leaving the project work area and prevent pollution of any water body caused by the runoff from the ears of construction activities under this contract, under the terms of Permit No LAR200000. The Contractor shall develop a site specific SWPPP that corresponds with the proposed construction activities by type and time of occurrence, and implement the SWPPP in a manner which will meet the requirements Permit No. LAR200000. The Contractor shall also assure that all subcontractors have reviewed the plan and that they comply with its provisions.

C. Definitions

Operator:- Any party associated with the construction project that meets either of the following two criteria: (1) the party has operational control over project specification (including the ability to make modifications in the specifications), or (2) the party has day-to-day control of those activities at a project site which are necessary to ensure compliance with the storm water pollution plan or other permit conditions (e.g., they are authorized to direct workers at the site to carry out activities identified in the storm water pollution prevention plan or comply with other permit conditions.)

Project Completion Report – A document that is completed and submitted to the LDEQ certifying that activities were completed in accordance with the requirements of the Clean Water Act and the Louisianan Environmental Quality Act, and specifically LPDES Small Construction General Permit. LAR200000, under which discharges related to the construction were authorized... The Project Completion Report should be

filed when the permittee is no longer the Construction Operator of the contract, or when termination of stormwater discharge has been accomplished.

D. Record Retention Requirements

Records of the Project Completion Report as well as any data used to complete it, the SWPPP, and any reports required by Permit No. LAR200000 shall be retained by the permittee for at least three years from the date that the site is finally stabilized. Certification of the SWPPP by the Contractor or any sub-contractor is required in accordance with Permit No. LAR200000.

E. Plan Accessibility

The Contractor shall post a notice near the main entrance of the construction site with the following information:

- The LDPES permit number (LAR200000) and effective date of this permit
- The name and telephone number of a local contact person
- A brief description of the project
- The location of the SWPPP

A copy of the SWPPP required by the permit, including a copy of the permit language shall be retained at the construction site from the date of construction initiation to the date of stabilization. The permittee with day-to-day operational control over the SWPPP implementation shall have a copy of the plan available at a central location on-site for the use of operators and those identified as having responsibilities under the plan.

F. LDEQ Correspondence

Any written correspondence concerning the NOI, Project Completion Report, SWPPP, or discharges covered under Permit No. LAR200000, shall be identified by permit number, if one has been assigned, and a copy provided to the Contracting Officer. LDEQ mailing address is as follows:

Louisiana Department of Environmental Quality
Office of Environmental Services
P.O. Box 82135
Baton Rouge, LA 70884-2135
Attn: Permits Division

G. Control Measures

Control measures that will be implemented shall be in compliance with Permit No. LAR200000, and identified in the SWPPP. The control measures shall include erosion control measures for both short and long term erosion control measures (BMP's) both vegetative and structural.

H. Maintenance and Inspection

The Contractor shall maintain the temporary and permanent vegetation, erosion and sediment control measures, and other protective measures in good and effective operating condition. The Contractor shall inspect disturbed areas of the construction site, areas used for storage of materials, stabilization practices, structural practices, and other controls at least once every fourteen (14) calendar days, before anticipated storm events expected to cause a significant amount of runoff, and within 24 hours of the end of any storm that produces 0.5 inches or more of precipitation.

A report of each inspection shall be made and included with the daily QC report. Any items identified in the inspection requiring repairs or restoration shall be immediately corrected and actions taken reported in the daily QC report.

I. Project Completion Report

Upon stabilization and elimination of all storm water discharges authorized by Permit No. LAR200000, a Project Completion Report shall be certified and submitted by the Contractor to the Permits Division of LDEQ. Certified mail is recommended as proof of the Project Completion Report submittal. A copy of the Contractor's Project Completion Report submittal shall be provided to the Contracting Officer at the time of submittal, prior to final acceptance of the work.

(3) Silt fences shall be installed in the locations shown on the site specific SWPPP. Silt fences shall be installed in accordance with the drawings and maintained until final stabilization is accomplished.

(4) Hay bales shall be installed in the locations shown on the site specific SWPPP. Hay bales shall be installed in accordance with the drawings and maintained until final stabilization is accomplished

(5) All paints and hazardous materials shall be kept in the original containers and tightly sealed with the manufacturer's label attached. These must be properly stored when not in use. They shall also be stored in a neat orderly manner in their original containers. Disposal of surplus materials shall be in accordance with the manufacturer's or State and Local regulations and recommended methods. Containers shall be empty before disposal.

(6) Petroleum products such as fuels and lubricants will be stored in tightly sealed containers that are clearly labeled. The storage and dispensing of all petroleum products will be in accordance with part 1926.152 of the OSHA Construction Industry Safety and Health Standards. All spills will be cleaned up on the same workday of the spill occurrence or whenever discovered.

(7) Soils contaminated with petroleum products will be removed from the site and disposed of in accordance with State and Local regulations.

(8) All onsite vehicles and equipment shall be monitored for leaks and receive regular preventive maintenance to reduce the chance for leakage. Leaks shall be repaired as soon as they are identified.

(9) Sumps used to control chemical pollution shall be sealed with plastic sheets having a minimum thickness of 20 mils.

(10) The contractor shall anchor all temporary materials used for pollution control in such a manner to prevent its being transported off the worksite by storm runoff water. Damage caused by clogging of downstream bridges and/or culverts by such temporary materials being transported downstream by storm water shall be the responsibility of the contractor.

(11) No separate payment will be made for this item. Compensation for Subsidiary Item, Pollution Control will be included in the payment for Bid Item 1, Channel Obstruction Removal and Bid Item 2, Channel Excavation, Sediment Removal.

DRAFT

STORM WATER POLLUTION PREVENTION PLAN

DSR 087-05-051K
Jeanfreau Ditch

DATE

TABLE OF CONTENTS

1.0 SITE OWNER 3
1.1 SWPPP COORDINATOR AND DUTIES 3
2.1 SITE LOCATION 3
2.2 CONSTRUCTION TYPE 3
2.3 EXISTING CONDITIONS 3
2.4 CONSTRUCTION SEQUENCE 4
3.0 ENDANGERED OR THREATENED SPECIES 4
4.0 POTENTIAL CONTAMINANTS 4
5.0 CONTROLS TO REDUCE POLLUTANTS 5
6.0 CERTIFICATION OF COMPLIANCE WITH REGULATIONS 6
7.0 MAINTENANCE AND INSPECTION PROCEDURES 6
8.0 CERTIFICATION 7
8.1 SUBCONTRACTOR CERTIFICATION 8

1.0 SITE OWNER

Owner's Name and Address: (Permanent)

St. Bernard Parish Government
8201 West Judge Perez Drive
Chalmette, LA 70043

Owner's Name and Address: (During Construction)

USDA Natural Resources Conservation Service
3737 Government St.
Alexandria, LA 71302

1.1 SWPPP COORDINATOR AND DUTIES

The construction site SWPPP coordinator for the DSR 087-05-051K – Jeanfreau Ditch Sediment and Debris Removal Project is (Contractor inserts appropriate persons name, title, contact no., etc.). Mr. _____ duties include the following:

- Implement the SWPPP
- Oversee installation of control measures
- Conduct inspections of control measures
- Identify deficiencies in the SWPPP or control measures and take corrective action

2.1 SITE LOCATION

The project site is located in St. Bernard Parish. The site is an existing earthen channel within the levee system that has been obstructed with sediment and debris as a result of Hurricane Katrina and is located in Section 59 and 78, Township 13S, Range 14E. The approximate coordinates of the site are:

Latitude 29.877852 and Longitude -89.808944 (@ Station 0+00)
Latitude 29.867140 and Longitude -89.811080 (@ Station 42+34)

The location map and site plan within the construction plans will act as the site map.

2.2 CONSTRUCTION TYPE

The construction will consist of removal and disposal of storm deposited marsh grass, sediment and debris from within the channel, excavation of storm deposited sediment and debris in the channel, limited clearing of trees to access existing spoil banks and placement and shaping of resulting spoil on existing spoil banks and thin spoil placement over marsh at the unprotected base of the protection levee. All bare areas caused by the construction operations will be seeded to permanent vegetation.

The total area estimated to be impacted by the construction activities is 4 acres.

2.3 EXISTING CONDITIONS

The area in which construction will take place is an existing earthen channel that has been obstructed with hurricane deposited debris and sediment.

The receiving water for any runoff from this project site is the Back Levee Canal which is pumped into the Bayou Dupre sump area which drains by gravity into Lake Borgne.

The NRCS Runoff Curve Number for the construction site prior to construction is estimated at 77 for brush, weed, and grass mix on a hydrologic group D soil in fair condition. After construction the RCN is estimated to be 73 for brush, weed, and grass mix on hydrologic group D soils.

2.4 CONSTRUCTION SEQUENCE

The proposed construction activities will be in the following sequence with the estimated quantities for each item:

ITEM	QUANTITY	UNIT
Excavation of sediment & placement and shaping of spoil and minor clearing for spoil disposal	4	Acres
Seed and fertilize entire disturbed area	2	Acres

3.0 ENDANGERED OR THREATENED SPECIES

The proposed construction activities are in the parish where 10 known and 1 possible endangered or threatened species have been listed. A specific list of the species is available upon request.

This project is a result of the damages to the watershed caused by Hurricane Katrina. The Emergency Watershed Protection Program (EWP) administered by the Natural Resources Conservation Service (NRCS) is the program under which the construction activities within this SWPPP will occur to return the project area to pre hurricane conditions. A nationwide programmatic EIS has been performed for the EWP Program. An on site environmental evaluation was made of this site by NRCS during the development of the Damage Survey Report (DSR). The environmental assessment in the DSR documents no threatened or endangered species were observed on site, and by implementation of this construction project the long term impacts to listed species will improved over the existing storm damaged conditions. Adverse impacts to threatened and endangered species are considered not likely.

4.0 POTENTIAL CONTAMINANTS

The following list of materials or substances are expected to be present during construction which could impact water or air quality if improperly used.

Petroleum Based Products
Sediment
Fertilizers

The Contractor will be responsible for spill prevention and cleanup. The Contractor will submit an emergency response plan to the Contracting Officer prior to the start of work on this contract. The Contractor's emergency response plan will be clearly posted and site personnel will be made aware of the procedures and the location of the information and cleanup supplies.

The following are the Material Management Practices that will be used to reduce the risk of spills or other accidental exposure of materials and substances to storm runoff water:

An effort will be made to store only enough products required to do the job. All materials stored on site will be stored in a neat, orderly manner in their appropriate containers and, if possible under a roof or other enclosure. Products will be kept in their original containers with the manufacturers' label. Manufacturers' recommendations for proper use and disposal will be followed. Containers of products will be empty before disposal.

The following additional Practices will be used to reduce the risks associated with hazardous materials:

Hazardous products will be kept in original containers unless containers cannot be resealed. Original labels and materials safety data will be retained. Surplus products and containers will be properly disposed of in accordance with manufacturers' or State and local regulations and recommended methods. Containers will be empty before disposal.

Petroleum Products:

All on site vehicles will be monitored for leaks and receive regular preventive maintenance to reduce the chance of leakage. Petroleum products will be stored in tightly sealed containers, which are clearly labeled. Any asphalt substances used on-site will be applied according to manufacturer's recommendations.

All spills of petroleum products will be cleaned up immediately. All contaminated soils will be removed from the site and disposed of in accordance with State and local regulations. Clean soils will be placed as necessary in the areas where contaminated soils were removed to return the area to the pre-spill condition. All disturbed areas will be fertilized and seeded as required in Construction Specification 6.

Fertilizers:

Fertilizers will be applied in the amount and at the rate recommended in the project specifications. These rates shall not exceed the manufacturers' recommendation. Storage will be in a covered shed. The contents of any partially used bags of fertilizer will be transferred to an acceptable sealable plastic container to avoid spills.

Spill Control Practices - The following additional practices will be followed for spill prevention and cleanup:

Manufacturers' recommended methods for spill cleanup will be clearly posted and site personnel will be made aware of the procedures and the location of the information and cleanup supplies. Materials and equipment necessary for spill cleanup will be available on-site.

All spills of hazardous materials will be cleaned up immediately after discovery. Spills of toxic or hazardous materials will be reported to the appropriate State and local government agency. The Contractor will be responsible for spill prevention and cleanup.

5.0 CONTROLS TO REDUCE POLLUTANTS

The Contractor will be required to prepare a written plan for pollution control at the project site. The plan will outline construction sequences and construction activities so that the least area possible is disturbed by the various construction activities in the course of the construction of the project. It will contain management provisions for storm water POLLUTION control.

It is the responsibility of the Contractor to develop a **Site Specific Storm Water Pollution Prevention Plan** around his proposed construction operations. The following Erosion and Sediment Control plan is offered for consideration by the Contractor in the development of his plan for the construction of the embankment and installation of the structures. The Contractor is reminded that **this is a draft plan only** and is not intended to dictate a construction sequence or any construction activities.

Temporary Erosion and Sediment Controls:

- Sediment fences and or hay bail barriers shall be installed as necessary at concentrated flow areas where spoil is placed in order to maintain spoil at the location of placement.
- Upon completion of shaping of resulting spoil, all bare areas will be fertilized and seeded in accordance with Specification 6 of the construction contract.

Waste Disposal

- All non vegetative debris removed from the site shall be disposed of in an approved facility.
- All chemical, hazardous and sanitary waste materials will be disposed of in an approved off-site disposal area. Chemical waste shall be temporarily stored in leak proof containers until disposed of in an approved area.
- Accidental chemical spills will be properly cleaned up on the same day of occurrence. Daily inspection will be made to determine needed cleanup.

6.0 CERTIFICATION OF COMPLIANCE WITH REGULATIONS

All local and state regulations will be adhered to concerning the burning of organic materials or disposal of organic, chemical, and sanitary waste. This project has been authorized by the Department of the Army in accordance with Section 404 of the Clean Water Act (CWA). The State of Louisiana, Department of Environmental Quality, has issued a Water Quality Certification permit. There are no other applicable State or Federal requirements for sediment and erosion site plans or storm water management site plans.

7.0 MAINTENANCE AND INSPECTION PROCEDURES

The Contractor will be responsible for intermittent review and inspection of the operation and maintenance of all pollution control measures throughout the life of the contract. Visual inspections of all cleared and graded areas of the construction site will be performed daily. Also inspection of the conditions and the need for repair shall be made after each storm rainfall exceeding 0.5 inch. Daily inspections of the need for clean up of chemical spills and sanitary facilities are specified.

The inspections will verify that the procedures used to prevent storm water contamination from construction materials are effective. Any items requiring maintenance will be immediately addressed.

8.0 CERTIFICATION

I certify under penalty of law that this document and all attachments were prepared under my direction or supervision in accordance with a system design to assure that qualified personnel properly gathered and evaluated the information submitted. Based on my inquiry of the person or persons who manages the system, or those persons directly responsible for gathering the information, the information submitted is, to the best of my knowledge and belief, true, accurate, and complete. I am aware that there are significant penalties for submitting false information, including the possibility of fine and imprisonment for knowing violations.

Signature: _____ Date: _____

Name: _____

Title: _____

Firm: _____

Address: _____

_____

_____

Phone: _____

8.1 SUBCONTRACTOR CERTIFICATION

I certify under penalty of law that I understand the terms and conditions of the general Louisiana Pollution Discharge Elimination Systems (LPDES) permit that authorizes the storm water discharges associated with industrial activity from the construction site identified as part of this certification.

Signature: _____ Date: _____

Name: _____

Title: _____

Firm: _____

Address: _____

_____

_____

Phone: _____

Signature: _____ Date: _____

Name: _____

Title: _____

Firm: _____

Address: _____

_____

_____

Phone: _____

STATE OF LOUISIANA
DEPARTMENT OF ENVIRONMENTAL QUALITY
Office of Environmental Services, Permits Division
Post Office Box 4313
Baton Rouge, Louisiana 70821-4313
PHONE#: (225) 219-3181
FAX#: (225) 219-3309

SMALL CONSTRUCTION ACTIVITY COMPLETION REPORT LAR200000

To be submitted by January 28 in the year FOLLOWING COMPLETION of covered activities.

Section I – Operator Information

Name: _____

Mailing Address: _____

City: _____ State: _____ Zip: _____

Phone Number: _____ DEQ AI# (if known): _____

Section II – Facility/Site Information

Name of Project: _____

Location of Project: _____

City: _____ State: _____ Zip: _____

Parish: _____ Name of Receiving Water: _____

Total Area of Land Disturbance (in acres) _____

Construction Start Date: _____

Construction Completion/Site Stabilization Date: _____

List existing or prior water discharge permits for the location: _____

Section III - Certification

I certify under penalty of law that project activities were completed in accordance with the requirements of the Clean Water Act and the Louisiana Environmental Quality Act, and specifically in accordance with the LPDES Small Construction General Permit, LAR200000, under which the storm water discharges related to the construction were authorized. I understand that submittal of this Report does not release an Operator from liability for any violation of the permit or the Act. I further certify that the information submitted is, to the best of my knowledge and belief, true, accurate, and complete, and that there are significant penalties for submitting false information, including the possibility of fine and imprisonment for knowing violations.

Printed Name: _____

Signature: _____

Date: _____

Construction Specification 6—Seeding, Sprigging, and Mulching

1. Scope

The work consists of preparing the area for treatment; furnishing and placing seed, sprigs, mulch, fertilizer, inoculant, lime, and other soil amendments; and anchoring mulch in designated areas as specified.

2. Material

Seed—All seed shall conform to the current rules and regulations of the state where it is being used and shall be from the latest crop available. It shall meet or exceed the standard for purity and germination listed in section 7.

Seed shall be labeled in accordance with the state laws and the U.S. Department of Agriculture rules and regulations under the Federal Seed Act in effect on the date of invitations for bids. Bag tag figures are evidence of purity and germination. No seed will be accepted with a test date of more than 9 months before the delivery date to the site.

Seed that has become wet, moldy, or otherwise damaged in transit or storage will not be accepted. The percent of noxious weed seed allowable shall be as defined in the current State laws relating to agricultural seeds. Each type of seed shall be delivered in separate sealed containers and fully tagged unless exception is granted in writing by the contracting officer.

Fertilizer—Unless otherwise specified, the fertilizer shall be a commercial grade fertilizer. It shall meet the standard for grade and quality specified by State law. Where fertilizer is furnished from bulk storage, the contractor shall furnish a supplier's certification of analysis and weight. When required by the contract, a representative sample of the fertilizer shall be furnished to the contracting officer for chemical analysis.

Inoculants—The inoculant for treating legume seeds shall be a pure culture of nitrogen-fixing bacteria prepared specifically for the species and shall not be used later than the date indicated on the container or as otherwise specified. A mixing medium, as recommended by the manufacturer, shall be used to bond the inoculant to the seed. Two times the amount of the inoculant recommended by the manufacturer shall be used except four times the amount shall be used when seed is applied using a hydraulic seeder. Seed shall be sown within 24 hours of treatment and shall not remain in the hydraulic seeder longer than 4 hours.

Lime and other soil amendments—Lime shall consist of standard ground agriculture limestone, or approved equivalent. Standard ground agriculture limestone is defined as ground limestone meeting current requirements of the State Department of Agriculture. Other soil amendments shall meet quality criteria and application requirements specified in section 7.

Mulch tackifiers—Asphalt emulsion tackifiers shall conform to the requirements of ASTM D 977, Specification for Emulsified Asphalt. The emulsified asphalt may be rapid setting, medium setting, or slow setting. Nonasphaltic tackifiers required because of environmental considerations shall be as specified in section 7.

Straw mulch material—Straw mulch shall consist of wheat, barley, oat or rye straw, hay, grass cut from native grasses, or other plants as specified in section 7. The mulch material shall be air-

dry, reasonably light in color, and shall not be musty, moldy, caked, or otherwise of low quality. The use of mulch that contains noxious weeds is not permitted. The contractor shall provide a method satisfactory to the contracting officer for determining weight of mulch furnished.

Other mulch materials—Mulching materials, such as wood cellulose fiber mulch, mulch tackifiers, synthetic fiber mulch, netting, and mesh, are other mulching materials that may be required for specialized locations and conditions. These materials, when specified, must be accompanied by the manufacturer's recommendations for methods of application.

3. Seeding mixtures, sod, sprigs, and dates of planting

The application rate per acre for seed mixtures, sprigs, or sod and date of seeding or planting shall be as shown on the plans or as specified in section 7.

4. Seedbed preparation and treatment

Areas to be treated shall be dressed to a smooth, firm surface. On sites where equipment can operate on slopes safely, the seedbed shall be adequately loosened (4 to 6 inches deep) and smoothed. Depending on soil and moisture conditions, disking or cultipacking, or both, may be necessary to properly prepare a seedbed. Where equipment cannot operate safely, the seedbed shall be prepared by hand methods by scarifying to provide a roughened soil surface so that broadcast seed will remain in place.

If seeding is to be accomplished immediately following construction operations, seedbed preparation may not be required except on a compacted, polished, or freshly cut soil surface.

Rocks larger than 6 inches in diameter, trash, weeds, and other debris that will interfere with seeding or maintenance operations shall be removed or disposed of as specified in section 7.

Seedbed preparation shall be discontinued when soil moisture conditions are not suitable for the preparation of a satisfactory seedbed as determined by the contracting officer's technical representative (COTR).

5. Seeding, sprigging, fertilizing, mulching, and stabilizing

All seeding or sprigging operations shall be performed in such a manner that the seed or sprigs are applied in the specified quantities uniformly in the designated areas. The method and rate of seed application shall be as specified in section 7. Unless otherwise specified, seeding or sprigging shall be accomplished within 2 days after final grading is completed and approved.

Fertilizer, lime, and other soil amendments shall be applied as specified in section 7. When specified, the fertilizer and soil amendments shall be thoroughly incorporated into the soil immediately following surface application.

The rate, amount, and kind of mulching or mesh shall be as specified in section 7. Mulches shall be applied uniformly to the designated areas. They shall be applied to areas seeded not later than 2 working days after seeding has been performed. Straw mulch material shall be stabilized within 24 hours of application using a mulch crimper or equivalent anchoring tool or by a suitable tackifier. When the mulch crimper or equivalent anchoring tool is used, it shall have straight blades and be the type manufactured expressly for and capable of firmly punching the mulch into the soil. Where the equipment can be safely operated, it shall be operated on the contour. Hand methods shall be used where equipment cannot safely operate to perform the work required.

The tackifier shall be applied uniformly over the mulch material at the specified rate, or it shall be injected into the mulch material as it is being applied. Mesh or netting stabilizing materials shall be applied smoothly, but loosely on the designated areas. The edges of these materials shall be buried or securely anchored using spikes or staples as specified in section 7.

The contractor shall maintain the mesh or netting areas until all work under the contract has been completed and accepted. Maintenance shall consist of the repair of areas damaged by water erosion, wind, fire, or other causes. Such areas shall be repaired to reestablish the intended condition and to the design lines and grades required by the contract. The areas shall be refertilized, reseeded, and remulched before the new application of the mesh or netting.

6. Measurement and payment

Method 1—For items of work for which specific unit prices are established in the contract, each area treated is measured as specified in section 7 and the area calculated to the nearest 0.1 acre. Payment for treatment is made at the contract unit price for the designated treatment, which will constitute full compensation for completion of the work.

When specified as an item of work, mesh or netting is measured to the nearest square yard of surface area covered and accepted. Payment is made at the contract unit price and will constitute full compensation for completion of the work.

Method 2—For items of work for which specific lump sum prices are established in the contract, the quantity of work will not be measured for payment. Payment for this item is made at the contract lump sum price for the item and will constitute full compensation for the completion of the work.

Method 3—For items of work for which lump sum prices are established in the contract, payment is made as the work proceeds. Progress payments will be determined as specified in section 7. Payment of the lump sum contract price will constitute full compensation for completion of the work.

All Methods—The following provisions apply to all methods of measurement and payment. Compensation for any item of work described in the contract, but not listed in the bid schedule is included in the payment for the item of work to which it is made subsidiary. Such items and the item(s) to which they are made subsidiary are identified in section 7.

7. Items of work and construction details

(See next sheet)

7. Items of work and construction details

Items of work to be performed in conformance with this specification and the construction details therefor are:

Subsidiary Item, Permanent Vegetation Seeding, Fertilization and Mulching

a. Permanent Vegetation Seeding

(1) This item will consist of furnishing and applying seed according to the following specifications:

(2) Seeding for permanent cover will be done on all bare areas such as channel slopes, berms, spoil placement areas, access routes and any other areas distrubed as a result of the debris and sediment removal. Fertilizer and seed will not be applied to areas with perennial ponded water.

(3) No seedbed preparation will be required if the construction equipment has produced a scarified surface and the seeding is done the day the areas to be seeded are worked. If the construction equipment has produced a slick surface, or seeding is not done the day the areas are worked, a seedbed will be prepared by scarifying the soil surface with a spike-tooth harrow or similar implement to a depth of one (1) inch. When more than one species of vegetation is required, each species shall be seeded separately. Permanent vegetation seeding will be applied at the following rates:

Seeding Period	**Species**	**Pure Live Seed (lb./ac)**
Mar 1 - Aug 31	Common Bermuda-grass (hulled)	45
Sep 1 - Dec 31	Tall Fescue	35
Jan 1 - Feb 28	Common Bermuda-grass(unhulled) and Common Bermuda-grass (hulled) and Rye Grass	20 20 25

b. Fertilization

(1) This item will consist of furnishing and applying fertilizer to all areas to be seeded according to the following specifications:

(2) Fertilizer will be a 1-1-1 ratio of N, P, and K, and will contain at least 13 lbs. of each per 100 lbs. of material.

Fertilizer rate (13-13-13 basis)	(14 lbs. per 1000 sq ft) or (600 lbs. per acre)

(1) One application of fertilizer will be applied at the time of planting as directed by the Government Representative.

c. Mulching

(1) No mulching will be required on this contract.

d. No separate payment will be made for this item. Compensation for this item will be considered as included in the payment for Bid Item 1, Channel Obstruction Removal, and Bid Item 2, Channel Excavation, Sediment Removal.

Construction Specification 7—Construction Surveys

1. Scope

The work consists of performing all surveys, measurements, and computations required by this specification.

2. Equipment and material

Equipment for construction surveys shall be of a quality and condition to provide the required accuracy. The equipment shall be maintained in good working order and in proper adjustment at all times. Records of repairs, calibration tests, accuracy checks, and adjustments shall be maintained and be available for inspection by the engineer. Equipment shall be checked, tested, and adjusted as necessary in conformance with manufacturer's recommendations.

Material is field notebooks, stakes, templates, platforms, equipment, spikes, steel pins, tools, and all other items necessary to perform the work specified.

3. Quality of work

All work shall follow recognized professional practice and the standards of the industry unless otherwise specified in section 9 of this specification. The work shall be performed to the accuracy and detail appropriate for the type of job. Notes, sketches, and other data shall be complete, recorded neatly, legible, reproducible and organized to facilitate ease in review and allow reproduction of copies for job documentation. Survey equipment that requires little or no manual recording of field data shall have survey information documented as outlined in section 9 of this specification.

All computations shall be mathematically correct and shall include information to identify the bid item, date, and who performed, checked, and approved the computations. Computations shall be legible, complete, and clearly document the source of all information used including assumptions and measurements collected.

If a computer program is used to perform the computations, the contractor shall provide the engineer with the software identification, vendor's name, version number, and other pertinent data before beginning survey activities. Computer generated computations shall show all input data including values assigned and assumptions made.

The elevations of permanent and temporary bench marks shall be determined and recorded to the nearest 0.01 foot. Differential leveling and transit traverses shall be of such precision that the error of vertical closure in feet shall not exceed plus or minus 0.1 times the square root of the traverse distance in miles. Linear measurements shall be accurate to within 1 foot in 5,000 feet, unless otherwise specified in section 9 of this specification. The angular error of closure for transit traverses shall not exceed 1 minute times the square root of the number of angles turned.

The minimum requirements for placing slope stakes shall be at 100-foot stations for tangents, as little as 25 feet for sharp curves, breaks in the original ground surface and at any other intermediate stations necessary to ensure accurate location for construction layout and measurement. Slope stakes and cross sections shall be perpendicular to the centerline. Significant breaks in grade shall be determined for cross sections. Distances shall be measured horizontally and recorded to the nearest 0.1 foot. Side shots for interim construction stakes may be taken with a hand level.

Unless otherwise specified in section 9 of this specification, measurements for stationing and establishing the location of structures shall be made to the nearest 0.1 foot.

Elevations for concrete work, pipes, and mechanical equipment shall be determined and recorded to the nearest 0.01 foot. Elevations for earth work shall be determined and recorded to the nearest 0.1 foot.

4. Primary control

The baselines and bench marks for primary control, necessary to establish lines and grades needed for construction, are shown on the drawings and have been located on the job site.

These baselines and bench marks shall be used as the origin of all surveys, layouts, and measurements to establish construction lines and grades. The contractor shall take all necessary precautions to prevent the loss or damage of primary control points. Any stakes or control points lost or damaged by construction activity will be reestablished by the contractor or at contractor expense.

5. Construction surveys

Before work starts that requires contractor performed surveys, the contractor shall submit in writing for the engineer's review: the name, qualifications, and experience of the individuals to be assigned to the survey tasks.

***Method 1*—**Contractor performed surveys shall include:

- checking and any supplemental or interim staking
- performing quantity surveys, measurements, and computations for progress payment
- other surveys as described in section 9 of this specification

***Method 2*—**Contractor performed surveys shall consist of all work necessary for:

- establishing line and grade for all work
- setting slope stakes for all work
- checking and any supplemental or interim staking
- establishing final grade stakes
- performing quantity surveys, measurements, and computations for progress payment
- other surveys as described in section 9 of this specification

***Method 3*—**Contractor performed surveys shall consist of all work necessary for:

- establishing line and grade for all work
- setting slope stakes for all work
- checking and any supplemental or interim staking
- establishing final grade stakes
- performing quantity surveys, measurements, and computations for progress payments
- performing original (initial) and final surveys for determinations of final quantities
- other surveys as described in section 9 of this specification.

6. Staking

The construction staking required for the item shall be completed before work on any item starts. Construction staking shall be completed as follows or as otherwise specified in section 9 of this specification:

***Clearing and grubbing*—**The boundary of the area(s) to be cleared and grubbed shall be staked or flagged at a maximum interval of 200 feet, closer if needed, to clearly mark the limits of work. When contractor staking is the basis for determining the area for final payment, all boundary stakes will be reviewed by the engineer before start of this work item.

***Excavation and fill*—**Slope stakes shall be placed at the intersection of the specified slopes and ground line. Slope stakes and the reference stakes for slopes shall be marked with the stationing, required cut or fill, slope ratio, and horizontal distance from the centerline or other control line. The minimum requirements for placing slope stakes is outlined in section 3, Quality of work.

***Structures*—**Centerline and offset reference line stakes for location, alignment, and elevation shall be placed for all structures.

7. Records

All survey data shall be recorded in fully identified standard hard-bound engineering survey field notebooks with consecutively numbered pages. All field notes and printed data shall include the purpose or description of the work, the date the work was performed, weather data, sketches, and the personnel who performed and checked the work. Electronically generated survey data and computations shall be bound, page numbered, and cross referenced in a bound field notebook containing the index for all survey activities. All work shall follow recognized professional practice.

The construction survey records shall be available at all times during the progress of the work for examination and use by the engineer and when requested, copies shall be made available. The original field notebooks and other records shall be provided to and become the property of the owner before final payment and acceptance of all work.

Complete documentation of computations and supporting data for progress payments shall be submitted to the engineer with each invoice for payment as specified in section 9 of the specification. When the contractor is required to conduct initial and final surveys as outlined in section 5, Construction Surveys, notes shall be provided as soon as possible after completion to the engineer for the purpose of determining final payment quantities.

8. Payment

***Method 1*—**For items of work for which lump sum prices are established in the contract, payment is made as the work proceeds, after presentation of correct and accurate invoices by the contractor showing related costs and evidence of the charges of suppliers, subcontractors, and others for supplies furnished and work performed. Invoices for the total amount of the contract price will not be accepted until all surveys are complete and required documentation has been determined complete. If the total of such payments is less than the lump sum contract price for this item, the unpaid balance will be included in the final contract payment. Payment of the lump sum contract price will constitute full compensation for completion of all work under the bid item.

***Method 2*—**For items of work for which lump sum prices are established in the contract, payment is made as the work proceeds with progress payment amounts determined as a percentage of the total work planned as projected from the contractor's approved construction schedule. Payment of the lump sum contract price will constitute full compensation for completion of all work under this bid item.

Payment will not be provided under this item for the purchase price of materials or equipment having a residual value.

Compensation for any item of work described in the contract, but not listed in the bid schedule will be included in the payment for the item of work to which it is made subsidiary. Such items and the item to which they are made subsidiary are identified in section 9 of this specification.

9. Items of work and construction details

9. ITEMS OF WORK AND CONSTRUCTION DETAILS

Items of work to be performed in conformance with this specification and the construction details therefore are:

a. Subsidiary Item, Construction Surveys

(1) This item shall consist of all labor, equipment and supplies necessary for the Contractor to establish lines and grades and set centerline offset and slope stakes for all work, perform original, progress and final surveys for the determination of progress and final payment quantities including the computation of progress and final payment quantities, perform supplemental or interim staking for the Contractor's own use, and any other surveys the Contractor feels are required which are not specifically indicated to be provided by the NRCS.

The Contractor shall provide the NRCS with the coordinates and elevations of any Contractor set control points and baseline offset information within 24 hours of the request.

(2) In Section 5, Construction surveys, Method 3 shall apply. NRCS will provide the following:

a) hubs with benchmark elevation at 1000 foot intervals

b) channel centerline stakes at intervals not to exceed 250 foot. In the event of a concrete lining, the channel centerline stakes may be offset. Any field determinations of channel centerline location will be made only by the NRCS and shall not cause removal of existing top of channel banks.

(3) The Contractor shall be responsible for executing the work to the limits, lines, locations and grades established by the NRCS as shown on the drawings and as staked in the field.

(4) The Contractor shall also be responsible for maintaining and preserving all stakes and other marks established by the NRCS. The NRCS shall provide, on a one time basis, the hubs and lines indicated above.

If such stakes or marks are destroyed by the Contractor through Contractor negligence, or by vandalism, etc. the Contractor shall bear sole responsibility for replacement. Depending on personnel availability, the NRCS may replace them and deduct the expense of the replacement from any amounts due or to become due to the Contractor.

(5) The Contractor shall be responsible for all surveys of any kind required by the Contractor other than those listed above to be specifically provided by the NRCS. The Contractor shall furnish, at the Contractor's expense, all notebooks, stakes, templates, platforms, equipment, tools, materials, etc. required for the Contractor’s construction surveys.

(6) Persons considered qualified by the NRCS to perform Contractor construction surveys shall be certified or licensed land surveyors, registered engineers, or construction personnel who are deemed qualified based on previous performance or who can demonstrate through performance that they are capable and qualified to perform any surveys required by the Contractor. At least 72 hours prior to beginning construction activities, the Contractor shall submit, in writing, to the

Contracting Officer for approval, the resumes, experience or qualification statements and references for the individuals to be assigned Contractor construction survey responsibilities.

If the Contactor changes the individuals assigned Contractor construction survey responsibilities, the Contractor shall submit, in writing, to the Contracting Officer for approval, the resumes, experience or qualification statements and references for the new individuals to be assigned Contractor construction survey responsibilities at least 72 hours in advance of any pending surveys to be performed by the Contractor.

(7) In addition to the Section 5, Method 3 requirements, the Contractor construction surveys shall be in accordance with the following:

a) Original and final cross section surveys by the Contractor for the determination of final quantities shall be taken at intervals not to exceed 250 feet. These Contractor selected cross sections shall be taken at locations which conform to the appropriate typical section. One Contractor selected cross section shall be taken at each station shown in the plans and supplemented as necessary to meet the 250 foot interval requirement.

If there is a significant volume of non-sedimentary debris (greater than 15% channel blockage by debris) at any particular cross section location, the Contractor shall receive concurrence from the COTR prior to taking the cross section. The Contractor shall notify the COTR at least 24 hours in advance of taking the cross section in order to allow the NRCS to make the determination to proceed with the cross section in the "as is" condition, remove the debris prior to taking the cross section, shift the cross section location or add additional cross sections as necessary to obtain an accurate representation of the channel bottom excluding significant non-sedimentary debris.

Additional cross sections shall be taken as needed to show abrupt changes between cross sections in the bank line and/or channel bottom. Cross section stationing shall follow the convention established in the plans. Each cross section shall extend from canal right-of-way to canal right-of-way or beyond the anticipated spoil disposal limits on each side of the canal whichever is greater. Where a levee is adjacent to the canal, the cross section shall begin at the top of the levee on the unprotected side and end on the opposite side of the canal as stated above. It shall be the Contractor's responsibility to begin and end the original cross sections at such locations that original data is available for all work areas adjacent to the canal.

b) Quantity survey cross sections for progress payments by the Contractor shall be taken at intervals not to exceed 250 feet. These Contractor selected cross sections shall be taken at locations which conform to the appropriate typical section. One Contractor selected cross section shall be taken at each station shown in the plans and supplemented as necessary to meet the 250 foot requirement.

c) Channel centerline offset and slope stakes shall be placed at intervals not to exceed 250 feet and shall be supplemented as necessary where additional control is needed by the workers to construct the channel to the lines and grades specified.

(8) The Contractor shall notify the NRCS at least 48 hours in advance of any pending original, progress or final surveys to be performed by the Contractor. NRCS may,

at its' discretion, provide a survey observer to accompany the Contractor's survey crew or conduct additional quality control surveys as necessary.

(9) Contractor computations for determining the quantities for payment shall be by the Average End Area Method. Prior to beginning construction activities, the Contractor shall submit, in writing, to the Contracting Officer for review the method by which quantity computations shall be performed (i.e. MS Excel spreadsheets, volume computation software, etc). The submittal shall also include the name and version of the volume computation software along with the developer's contact information.

(10) The Contractor shall submit two (2) copies of survey data, notes, computations, etc., to the Contracting Officer at least 72 hours in advance of requesting payment for any quantities derived from such surveys. Notes, sketches and other data shall be complete, recorded neatly, legible, reproducible and organized in a manner that will allow interpretation and reproduction of copies for job documentation. The Contractor shall provide the NRCS with electronic copies on CD of end area and volume computations and data sets in ASCII format arranged in columns as follows: point number, northing, easting, elevation and description. The Contractor shall provide the NRCS with plotted cross sections showing both the pre-construction grade and the neat-line grade in digital .DGN, .DWG or .DXF format compatible with or convertible to be usable in MicroStation 2004 Edition, Version 8. The NRCS will confirm the calculated quantities before certifying payment quantities or making any payments.

(11) The Contractor shall take the appropriate precautions and use specialized equipment, procedures and techniques as necessary to accurately locate the pre-construction top of sediment grade and the post-construction channel grade. See Construction Specification 202, Channel Excavation, for a description of the pay limits.

(12) No sediment quantity surveys shall be made inside pipes, box culverts, or other small closed conduits. The sediment removed from inside pipes, box culverts, and other closed conduits will be considered subsidiary to channel sediment removal and will not be measured for payment. For additional details, see Construction Specification 202, Channel Excavation.

(13) No separate payment will be made for Construction Surveys. Compensation for this subsidiary item shall be included in the payment for <u>Bid Item 1, Channel Excavation, Sediment Removal.</u>

Construction Specification 8—Mobilization and Demobilization

1. Scope

The work consists of the mobilization and demobilization of the contractor's forces and equipment necessary for performing the work required under the contract. It does not include mobilization and demobilization for specific items of work for which payment is provided elsewhere in the contract. Mobilization will not be considered as work in fulfilling the contract requirements for commencement of work.

2. Equipment and material

Mobilization shall include all activities and associated costs for transportation of contractor's personnel, equipment, and operating supplies to the site; establishment of offices, buildings, and other necessary general facilities for the contractor's operations at the site; premiums paid for performance and payment bonds including coinsurance and reinsurance agreements as applicable; and other items specified in section 4 of this specification.

Demobilization shall include all activities and costs for transportation of personnel, equipment, and supplies not required or included in the contract from the site; including the disassembly, removal, and site cleanup of offices, buildings, and other facilities assembled on the site specifically for this contract.

This work includes mobilization and demobilization required by the contract at the time of award. If additional mobilization and demobilization activities and costs are required during the performance of the contract as a result of changed, deleted, or added items of work for which the contractor is entitled to an adjustment in contract price, compensation for such costs will be included in the price adjustment for the item or items of work changed or added.

3. Payment

Payment will be made as the work proceeds, after presentation of paid invoices or documentation of direct costs by the contractor showing specific mobilization and demobilization costs and supporting evidence of the charges of suppliers, subcontractors, and others. When the total of such payments is less than the lump sum contract price, the balance remaining will be included in the final contract payment. Payment of the lump sum contract price for mobilization and demobilization will constitute full compensation for completion of the work.

Payment will not be made under this item for the purchase costs of materials having a residual value, the purchase costs of materials to be incorporated in the project, or the purchase costs of operating supplies.

4. Items of work and construction details

(See next page.)

4. Items of work and construction details

Items of work to be performed in conformance with this specification and the construction details therefor are:

a. Subsidiary Item, Mobilization and Demobilization

(1) This item shall consist of mobilizing and demobilizing personnel and equipment in preparation to perform the work within the scope of this contract.

(2) This item shall not include transportation of personnel, equipment and operating supplies between and within the work limit areas of this Contract.

(3) Fences, which must be cut or removed for access, shall be repaired or replaced by the Contractor at his/her expense to equal or exceed the quality of fencing that was in place prior to cutting or removal.

(4) Access shall be as shown on the drawings. If alternate routes are obtained by the Contractor, they must be approved by the NRCS prior to use. All access routes shall be restored, by the Contractor, to a condition equal to or better than the condition prior to the commencement of work under this contract.

(5) No separate payment will be made for this item. Compensation for this item will be considered as included in the payment for Bid Item 1, Channel Obstruction Removal and Bid Item 2, Channel Excavation, Sediment Removal.

Construction Specification 9—Traffic Control

1. Scope

The work shall consist of establishing traffic control and maintaining safe, convenient use of public roads and rights-of-way.

2. Traffic and access

The contractor's operations shall cause no unnecessary inconvenience to the public. The public rights-of-way shall be maintained at all times unless interruption is authorized by proper local authority. Contractor's authorized closing or detour plans shall be provided to the engineer for approval.

Safe and adequate access shall be provided and maintained to all public protection devices and to all critical utility control locations. Facility access shall be continuous and unobstructed unless otherwise approved.

3. Storage of equipment and material in public streets

Construction materials and equipment shall not be stored or parked on public streets, roads, or highways. During any material or equipment loading or unloading activities that may temporarily interfere with traffic, an acceptable detour shall be provided for the duration of the activity. Any associated expense for this activity is the responsibility of the contractor.

Excavated material, including suitable material that is intended for adjacent trench backfill or other earth backfill as specified in section 5 of this specification, shall not be stored on public streets, roads, or highways that remain in service for the public. Any waiver of this requirement must be obtained from the proper local authority and approved by the engineer. All excess and unsuitable material shall be removed from the site as soon as possible. Any spillage shall be removed from roadways before they are used by the public.

4. Street closures, detours, and barricades

The contractor shall comply with the requirements of all applicable responsible units of government for closure of any street, road, or highway. The contractor shall provide the required barriers, guards, lights, signs, temporary bridges, and flaggers together with informing the public of any detours and construction hazards by the most suitable means available, such as local newspapers or radio stations. The contractor is also responsible for compliance with additional public safety requirements that may arise during construction. The contractor shall furnish, install, and, upon completion of the work, promptly remove all signs, warning devices, and other materials used in the performance of this work.

Unless otherwise specified, the contractor shall notify, in writing, the fire chief, police chief, county sheriff, state patrol, schools that operate school buses, or any other government official as may be appropriate no less than 7 days before closing, partly closing, or reopening any street, road, or highway.

Unless otherwise specified, the contractor shall furnish to the engineer a written plan showing the proposed method of signing, barricading for traffic control, and safety for street detours and closures.

All temporary detours will be maintained to ensure use of public rights-of-way is provided in a safe manner. This may include dust control, grading, and graveling as required in section 7 of this specification.

5. General and specific references

All signs, signals, barricades, use of flaggers, and other traffic control and public safety devices shall conform to the general requirements set forth in the Manual of Uniform Traffic Control Devices (MUTCD) and the latest edition of *Standard Highway Signs and Standard Alphabets for Highway Signs* and/or OSHA *Construction Industry Standards (29 CFR Part 1926), Subpart G, Signs, Signals, and Barricades* unless otherwise specified in section 7 of this specification.

6. Measurement and payment

For items of work for which specific lump sum prices are established in the contract, payment for the work is made at the contract lump sum price. Progress payments will be made based upon the percentage of estimated total time that traffic control will be required unless otherwise specified in section 7 of this specification. Payment will constitute full compensation for all flaggers, labor, materials, equipment, and all other items necessary and incidental to completion of the work.

Compensation for any item of work described in the contract, but not listed in the bid schedule will be included in the payment for the item of work to which it is made subsidiary. Such items and items to which they are made subsidiary are identified in section 7 of this specification.

7. Items of work and construction details

(See next page.)

7. Items of Work

Items of work to be performed in conformance with this specification are:

a. Subsidiary Item, Traffic Control

(1) This item shall consist of providing the necessary traffic control devices (signs, signals, markings, personnel, etc.) where needed, to allow for the safe and expeditious movement of traffic through and adjacent to the construction area for the completion of this contract.

(2) The contractor, shall have a comprehensive traffic control plan. The plan shall address, as a minimum, the following requirements:

(a) The design and application of all signals, pavement markings, channelizing devices, and warning signs shall conform to the *"Louisiana Manual on Uniform Traffic Control Devices*", 1988 Edition, as revised.

(b) Channelizing and delineation devices shall be used to mark all construction areas. These shall be Type II and/or Type III barricades, and/or barrels, all fully reflectional with lights, and weighted with sandbags.

(c) Any traffic control devices (signs, signals, markings) which exist as part of the normal pre-construction scheme, and that do not apply to an appropriate situation, or are in the way of construction, shall be covered, removed, or relocated by the contractor.

(d) The roadway and all traffic control devices shall be restored to original conditions by the contractor.

(e) All excavations shall be covered, backfilled, or protected, (see “b”, above) at night and when work is not in progress. Excavated pits, etc., shall be fully fenced or barricaded (see “b”, above) to prevent access by pedestrians.

(f) All materials/machines shall be stored outside of the road surface, creating no sight distance problems, and fully delineated as in “b”, above.

(g) If sections of roadway are totally closed, the contractor shall notify the sheriff's traffic division, 911 operators, the fire department, and any major traffic generators (i.e. schools, etc.). A three working day, minimum, advance notice will be required.

(h) On totally closed sections of the roadway, the contractor shall provide access for local traffic only.

(i) The contractor shall check traffic control devices on a daily basis as a minimum when beginning and ending the work day, to insure adherence to the plans and proper adequacy of devices for day and night visibility. On weekends, devices shall be checked a minimum once per day.

(j) Flagman and/or sheriff's control shall be provided as specified by the COTR.

(k) Yellow, high visibility pennant barrier flagging (nylon rope with plastic pennants) shall be strung between Type II barricades and barrels/drums, only as directed by the COTR.

(l) This traffic control device plan indicates general traffic control devices to be used on this project. It is anticipated that conditions will vary depending on the phase under construction and that the arrangement of those devices will be reviewed on a daily basis. Should the contractor have any question as to the arrangement of those devices, the COTR shall be notified to make an inspection of the site.

(m) Contractor shall provide for the movement of pedestrians for the entire length of the contract. As much as possible, the contractor shall not obstruct existing sidewalks, thereby obstructing pedestrian movements. If existing sidewalks must be obstructed, the contractor shall provide for the movement of pedestrians by posting appropriate signing, such as, "Sidewalk Closed-Use Other Side of Street". Signing shall be reflectorized and lighted at night.

(n) Also, where trenches are excavated outside the roadway surface, the contractor shall provide each dwelling at least one accessible crossing of the backfilled trench area, for use by pedestrians.

(o) As much as possible, the contractor shall provide access to area businesses.

(3) No separate payment will be made for this item. Compensation for this item will be considered as included in the payment for Bid Item 1, Channel Obstruction Removal and Bid Item 2, Channel Excavation, Sediment Removal.

Construction Specification 202—Channel Excavation

1. Scope
The work shall consist of the excavation of all materials necessary for the construction of channels and the disposal of all excavated materials.

2. Classification
Channel excavation shall be unclassified and shall include all materials encountered regardless of their nature or the manner in which they are removed.

3. Marking
The limits of the channels to be excavated will be marked by means of stakes, flags, or other suitable methods.

4. Excavation
Channels shall be excavated as closely as practicable to the lines, grades, and cross sections shown on the plans, considering the character of the material and the excavation methods employed. The excavated surfaces shall be reasonably smooth. In no case shall the excavated cross-sectional area of the channel be less than the specified area.

5. Disposal of excavated material
Material excavated from the channel shall be disposed of in the locations and in the manner shown on the drawings or as specified in Section 7 of this specification.

6. Measurement and payment
For items of channel excavation, for which specific unit prices are established in the contract, the volume of excavation will be measured within the specified limits and computed to the nearest cubic yard by the method of average cross-sectional end areas. Regardless of quantities excavated, the measurement for payment will be made to the specified pay limits.

Payment for items of work listed in the bid schedule will be made at the contract unit price. Such payment will constitute full compensation for all labor, materials, equipment, and all other items necessary and incidental to the performance of the work. Compensation for any item of work described in the contract but not listed in the bid schedule will be included in the payment for the item of work to which it is made subsidiary. Such items and the items to which they are made subsidiary are identified in Section 7 of this specification.

Method 1- The pay limits for channel excavation shall be the neat lines and grades shown on the drawings.

Method 2- The pay limits for channel excavation shall be the neat lines and grades shown on the drawings plus an allowable overcut on the channel bottom up to the limits specified in Section 7.

All Methods - The volume of spoil required to be spread will not be measured directly. The volume to be paid for will be considered equal to the volume of required channel excavation from which such spoil resulted.

The volume of spoil required to be hauled will not be measured directly. The volume to be paid for will be considered equal to the volume of required channel excavation from which such spoil resulted.

7. Items of work and construction details

Items of work to be performed in conformance with this specification and the construction details therefor are:

a. Bid Item 1, Channel Excavation, Sediment Removal

(1) This item shall consist of the removal of all sediment deposited by Hurricane Katrina from within the channels and the placement and dressing of the resulting spoil to the specified limits shown on the drawing or as staked in the field. When all removed sediment cannot be placed on-site, this item shall also include the loading, hauling, and off-site disposal of the excavated sediments.

Excavation shall start at the downstream end of channel and proceed upstream. Over excavation for equipment access or other reasons will not be permitted.

(2) No spoil shall be placed within a minimum of ten (10) feet bridges and culverts. No spoil shall be placed within the slopes of side drains (including ditches, drains, canals and streams) that enter the channels being excavated.

(3) No material shall be deposited in or allowed to enter any ditch or other watercourse or gaps in existing spoil banks.

The end slopes of placed spoil at gaps or openings shall be 4:1 or flatter.

Temporary or permanent placement of logs/debris into tributaries, side ditches, or other defined water entrances will not be allowed for any reason. Should the Contractor need to cross such watercourses as part of his/her sediment removal operation then the Contractor shall bridge such watercourses using temporary bridging materials, such as equipment mats, which will not obstruct the flow of the watercourse.

(4) It shall be the responsibility of the Contractor to clean out through parish road culverts that are within the work limits. It shall be the responsibility of the Contractor to clean out under parish road bridges that are within the work limits to the lines and grades shown on the drawings.

(5) When work is to be done in the vicinity of a conduit, such as a gasline, waterline, or pipeline, or an electrical cable or other utility, it shall be the Contractor's responsibility to notify each utility owner of the time construction work is planned in the vicinity of their utility. A copy of such notification shall be sent to the Contracting Officer. Such notification shall be made far enough in advance that said interested parties may make all necessary adjustments of their utility fixtures and appurtenances within or adjacent to the limits of construction.

When the Contractor’s operation requires travel over a buried conduit or other utility, the Contractor shall protect the buried conduit or utility as necessary to prevent damages to the buried conduit or utility. Any damages shall be repaired at the Contractor’s expense.

(6) Care shall be taken when placing and dressing the spoil to minimize damages to existing vegetation. Clearing for access and/or placement of spoil resulting from the sediment removal operations shall be limited only to that absolutely necessary for equipment operation and placement and dressing of spoil. All woody materials cleared or damaged shall be considered as debris and disposed of in accordance with Construction Specification

203, Channel Obstruction Removal.

Living Live Oak Trees shall not be damaged or removed. Spoil shall not be placed within the drip line of any Live Oak Tree. Spoil placed outside the drip line of any Live Oak Tree shall be dressed and graded so that positive drainage is maintained away from the Live Oak Tree. No water shall be allowed to pond around any Live Oak Tree.

Trees and other woody vegetation that must be cleared shall be removed in such a manner that the remaining stumps are cut parallel to the ground and extend no higher than 6 to 10 inches above the ground surface.

(7) The excavated material shall be deposited at the locations and to the lines and grades shown on the drawings and as staked in the field. Placement of on-site spoil shall not be allowed outside the canal right-of-way unless otherwise approved by the Contracting Officer's Technical Representative (COTR), Sponsor and the property owner in writing. At the time of excavation, the spoil shall be placed in a manner that will provide drainage away from the channel top bank when possible but shall under no circumstances block or impede the natural drainage pattern from adjacent property that existed prior to construction.

Placement of spoil shall be terminated at a specific location if the spoil flow or runoff has or can be reasonably expected to re-enter the excavated channel or any other watercourse. The Contractor is responsible for the removal of any sediment that re-enters the excavated channel or any other watercourse during the contract period. It is expected that the spoil material will be very soft in consistency and will have a tendency to "run". The Contractor shall take the necessary actions (i.e. silt fencing, hay bale fences, etc) to insure that the spoil will not run back into the channel. Such actions shall be a part of the Contractor's Pollution Control Plan and shall be provided in conformance with the requirements of Construction Specification 5, Pollution Control.

When the volume of excavated sediment exceeds the capacity of the limits allowed for placement on the spoil bank or the sediment removal operations are in a developed area, such as a residential or landscaped area, then the following shall apply as concurred in by the COTR. The excess spoil shall be loaded and hauled to an approved spoil bank area within the project area or to an approved spoil disposal site. The Contractor shall provide to the Contracting Officer the intended location for disposal of excess spoil at least three (3) days prior to the start of work. The Contractor is responsible for payment of any tipping fees associated with the spoil disposal.

(8) Dressing of spoil shall be carried on concurrently with the excavation of the adjacent channel.

Spoil shall be bucket dressed so as to provide for a smooth, neat and uniform finish free of depressions or track or wheel ruts. See Construction Specification 6, Seeding, Sprigging and Mulching, for the seeding requirements.

(9) **Trees, stumps and all other debris collected during excavation operations shall not be placed within the spoil**. This material shall be considered debris and disposed of in accordance with Construction Specification 203, Channel Obstruction Removal.

(10) No separate payment will be made for loading spoil, hauling spoil, off-site spoil disposal or on-site spoil dressing. Compensation shall be included in the payment for Bid Item 1, Channel Excavation, Sediment Removal.

(11) No separate measurement and payment will be made for sediment removal inside pipes, box culverts and other closed conduits. Such work shall be considered as subsidiary to channel sediment removal. Compensation shall be included in Bid Item 1, Channel Excavation, Sediment Removal.

(12) In Section 6, Measurement and payment, payment will be by Method 1. Such payment will constitute full compensation for related subsidiary items, "Pollution Control"; "Permanent Vegetation Seeding, Fertilization and Mulching"; “Construction Surveys”; “Mobilization and Demobilization”; “Traffic Control”; and “Channel Obstruction Removal, Debris Removal”. Measurement for payment of sediment removal shall be as specified in Section 6 except that cross sections for payment shall be taken at a maximum of 250 foot intervals. See Construction Specification 7, Construction Surveys, for additional requirements.

Construction Specification 203—Channel Obstruction Removal

1. Scope

The work shall consist of the cleanup of designated channel areas consisting of the removal and disposal of trees, logs, stumps, brush, tops, rubbish, debris and other items as specified in Section 8 deposited in the channel.

2. Access

Access shall be designated by NRCS unless alternate routes are obtained by the Contractor in writing and approved by NRCS. All access routes shall be restored, by the Contractor, to the condition prior to the commencement of work under this contract. A permit modification will not be required for an existing access road to a channel providing no improvements, such as land clearing, widening, placing fill, or surfacing, are required. A contract modification will be required where improvements such as land clearing, widening, placing fill, surfacing of an existing trail, or where there is no trail, and access is through a wetland. In addition, a contract modification will be required for the additional access route providing a permit is granted by the appropriate regulatory agencies.

3. Limits of Work

The beginning and ending work limits are as shown on the "Site Location Maps". Each end of each reach of the channel and its tributaries designated for obstruction removal will be referenced to identified roads or other structures or landmarks or be marked by the Government Representative by means of stakes, flags, or other suitable markers.

The work limits are as shown on the project drawings.

When debris removal is required at bridge and culvert locations, the work limits shall be the distance necessary to remove all floating and submerged accumulated debris. At bridges and culverts, both sides of the channel may be used as work sides if conditions warrant.

4. Removal

Flow obstructions shall be removed by methods including, but not limited to, sawing, cabling, winching, lifting, or dragging. No excavation for floatation or any other reasons will be allowed.

The following guidelines will be used to determine which trees, stumps, and brush to remove. **The final determination will be made by the Government Representative.**

a. All downed trees, brush, limbs, tops, vines, and other washed-in woody vegetative materials lying completely or partially within the stream banks shall be removed.

b. Undermined or storm damaged trees within or outside the banks which are still standing but likely to fall into the stream shall be removed.

c. Stumps of downed trees within the channel banks shall not be removed unless otherwise noted in Section 8 of this specification.

All building materials, manufactured items, and other loose foreign debris lying completely or partially within the limits of designated areas shall be removed.

5. Disposal

All material produced from "Channel Obstruction Removal", shall be hauled to the nearest public landfill or disposed of as specified in Section 8 of this specification.

Temporary or permanent placement of logs/debris into tributaries, side ditches, floodplains or other defined water entrances to the watercourse being cleaned will not be allowed for any reason. Should the contractor need to cross such water entrances as part of his/her debris removal operation then the contractor shall bridge such watercourses using temporary bridging materials, such as equipment mats, which will not obstruct the flow of the side drains. Should the contractor need to cross the watercourse being cleaned, the same crossing methods shall be utilized. All swales and low areas that are wet or subject to rutting will be crossed using mats. If these same areas are dry and rutting is minimal to none when crossing, mats will not be required.

6. Special Requirements

Travel paths constructed in the work areas shall be kept to the minimum necessary. The contractor shall prosecute his work to prevent avoidable damage to the maximum extent possible.

A five (5) foot wide buffer along top bank will be left on the work side. The contractor shall make every effort possible to minimize destruction of trees and vegetation within the buffer. Some destruction of trees and vegetation may occur during debris removal however, the impact should be minimal to the top bank and the area adjacent to the top bank. The five (5) foot dimension for the buffer shall be measured on the work side from the top bank to a point five (5) feet away from the channel. No benching of the channel sides will be permitted.

All saw cuts shall be made parallel to and as close to ground level as the cutting tools will permit, but no higher than 6" – 10" above the ground.

The Contractor shall take reasonable precautions to prevent further damage to the channel and its environment to include channel banks, fishery resources, and undamaged trees. The Contractor shall provide tanks or barrels to be used for off-site disposal of chemical pollutants such as drained lubricating or transmission oils, greases, etc. produced as a by product of this work. Washing, fueling, or servicing of equipment shall be avoided where spillage or wash water can enter the watercourse.

Equipment, with the exception of barges or marsh buggies, shall not be allowed to operate within the channel. Barge mounted equipment or marsh buggies can only be used within the channel providing there is sufficient depth of water for the barge or marsh buggy to float.

The number of channel crossings shall be kept to a minimum. Materials used to form channel crossings shall be removed once the work for the subject reach is completed.

The Contractor shall backfill holes in the channels and channel banks resulting from stump removal **in residential and other landscaped areas.** Backfill shall be the best fill material available from within fifty (50) feet of the stump hole (excluding the channel). Upon occasion, spoil may not be available. In such cases, suitable fill material as concurred in by the COTR shall be hauled into the site to fill the stump holes. In residential or other landscaped areas, the fill used to backfill the stump holes shall be topsoil. All track or wheel ruts created as a result of the debris removal operations shall be removed by dressing the area or by backfilling as prescribed above for stump holes.

All track or wheel ruts created as a result of the debris removal operations within the removal limits along the channel, access routes, and disposal sites shall be removed by dressing the area or by backfilling as prescribed above for stump holes. Upon completion of dressing operations all these areas shall be seeded in accordance with Specification 6.

Fences which must be cut or removed for access shall be repaired or replaced by the Contractor at his expense to equal or exceed the quality of fencing that was in place prior to cutting or removal.

The Contractor shall take all reasonable precautions to prevent further damage to structures, utilities, or other fixed improvements and shall promptly repair or replace at his expense any such improvements damaged by his operations.

The Contractor shall coordinate with the appropriate road department, the methods and manners of traffic control.

7. Measurement and payment

Payment will be made on a lump sum basis. Such payment shall be considered full compensation for all materials, labor, equipment, tools, seeding and other items necessary and incidental to complete the work.

8. Items of work and construction details

Items of work to be performed in conformance with this specification and the construction details therefore are:

a. Subsidiary Item, Channel Obstruction Removal, Debris Removal

1) This item shall consist of the removal and disposal of all obstructions such as trees, limbs, building materials, metal, cars, ATV's, white goods, etc. caused by Hurricane Katrina and/or Rita and those major obstructions which could cause upstream flooding from within the specified limits shown on the drawing or as staked in the field.

2) **No dozers larger than a D-4, or equivalent, or log skidders of any size shall be allowed to be used.**

3) Storm related woody debris caused by Hurricane Katrina or Rita within the work limits shall be removed. In landscaped areas or maintained (mowed or manicured) yards all storm debris within the work limits shall be removed. For channels in wooded areas with a top bank width of greater than 20 feet and in which a boat can be floated at the time of the debris removal, vegetative debris longer than 4 feet and a diameter greater than 4 inches within the work limits shall be removed. For channels in all other areas with a top bank width of less than 20 feet or in which a boat can not be floated at the time of debris removal, vegetative debris longer than 18 inches and a diameter greater than 2 inches within the work limits shall be removed. This is to include, but is not limited to all debris (trees, root balls which have been displaced, etc.) that is a part of the debris within the work limits. Accumulated debris, regardless of size, resulting from Katrina or Rita forming an obstruction at culverts, bridges, and at any other location within the channel shall be removed.

4) Leaning trees, (those which are leaning over the channel and are identified for removal by the COTR or his/her representative), shall be cut off at the ground line leaving the root mass in place. If any part of a downed or leaning tree, identified for removal, is within the removal limits, the tree shall be removed back to the removal limits. If the root mass of such tree is outside the work limits, the tree shall be cut off at the removal limits and the root mass shall remain. The root mass of any tree, within the removal limits, designated for removal, shall only be left in place if 50% or more of the root mass is still in direct contact with the soil. Root masses of trees, within the removal limits, that are designated for removal and which are less than 50% in contact with the soil shall be removed, unless

the removal of such root mass would cause a potentially erosive condition as determined by the COTR. Any hanging tree tops or limbs within the work limits which pose a safety issue to the contractor's employees shall be removed and disposed of. The contractor shall take necessary precautions not to damage any existing trees; however if any trees are damaged by the debris removal operations, they shall be removed and disposed of as directed by the COTR. Trees damaged during the debris removal operation will be treated with a tree wound treatment product consisting of an asphalt based emulsion as directed by the COTR.

5) Sediment removal shall conform to Construction Specification 202, Channel Excavation. No material considered debris as described will be allowed to be placed in the spoil resulting from the removal of sediment with the following exception. Spoil may be placed on top of woody debris that has been chipped in accordance with paragraph 8.a.7)a. below. Any debris encountered as a result of the sediment removal shall be disposed of as prescribed within this specification.

6) The contractor is responsible for any debris, which his operation may dislodge and cause to float downstream of the work area.

7) Prior to the contractor being issued a notice to proceed, the contractor shall submit to NRCS in writing the method of debris disposal which he/she intends to use. The proposed method must be approved by NRCS prior to the start of work. Any of the following methods of disposal may be used, if approved by NRCS:

   a) All woody debris including dislodged stumps shall be chipped. Chips shall be blown and spread evenly onto the top bank (work side work area) and into the adjacent wooded areas. At no time shall chips be more than 6 inches deep. Placing chips within the flow lines of any mainline or side channels will not be allowed. The chipping operation shall be such that it will not allow the chips to re-enter the channel being worked.

   b) All woody debris and/or noncombustibles and material removed from within the work limits shall be disposed of by loading and hauling to any federal, state or locally approved public landfill. The contractor is responsible for payment of any tipping fees unless specified otherwise in the contract.

8) **Any hazardous material** encountered, such as batteries, used motor oil, scrap tires, white goods, any item which could contain CFC's, etc., shall be loaded and hauled to an approved hazard waste disposal site.

9) At least 24 hours prior to the removal of an abandoned vehicle or vessel such as automobiles, trailers, mobile homes, motorcycles, boats, etc from the channel, notification shall be made to the Abandoned Vehicle Point of Contact as specified in the Special Provisions.

10) No separate payment will be made for this item. Compensation for this subsidiary item shall be included in Bid Item 1, Channel Excavation, Sediment Removal.